FINAL EXPRESS TERMS
FOR
PROPOSED BUILDING STANDARDS
OF THE
DEPARTMENT OF HOUSING AND COMMUNITY DEVELOPMENT
REGARDING THE ADOPTION BY REFERENCE OF THE
2015 EDITION OF THE INTERNATIONAL EXISTING BUILDING CODE
WITH PROPOSED AMENDMENTS INTO THE
2016 CALIFORNIA EXISTING BUILDING CODE
CALIFORNIA CODE OF REGULATIONS, TITLE 24, PART 10

(HCD 04/15)

The Department of Housing and Community Development (HCD) proposes to adopt the 2015 edition of the International Existing Building Code (IEBC) for codification and effectiveness into the 2016 edition of the California Existing Building Code (CEBC) as presented on the following pages, including any necessary amendments. HCD further proposes to:

- Repeal the 2012 edition of the International Existing Building Code;
- Repeal the 2013 edition of the California Existing Building Code, which includes amendments to the model code that are no longer necessary;
- Repeal or amend building standards that are not addressed by a model code;
- Relocate or codify existing adopted and necessary amendments to the model code into the format of the model code proposed for adoption, the action of which has no regulatory effect; and/or
- Adopt new building standards that are not addressed by the model code proposed for adoption.

LEGEND FOR EXPRESS TERMS:

1. **IEBC language with new California amendments:** IEBC language shown in normal Arial 9 point; California amendments to IEBC text shown *underlined and in italics* with vertical bar in left margin.

2. **Existing California amendments being modified**: All such language shown in *italics,* modified language is *underlined* or shown in ~~*strikeout*~~ with vertical bar in left margin.

3. **Existing California amendments with no modifications:** All such existing language shown in *italics,* modified model code language shown in ~~strikeout~~.

4. **Text not being modified**: All language not displayed in full is shown as "…" (i.e., ellipsis).

5. **Repealed text**: All language shown in ~~strikeout.~~

6. **Notation:** Authority and Reference citations are provided at the end of each action.

SUMMARY OF REGULATORY ACTION

HCD PROPOSES TO:

- Adopt standards from the 2015 International Existing Building Code (IEBC) into the 2016 California Existing Building Code (CEBC) **without amendment**.
- Adopt standards from the 2015 International Existing Building Code (IEBC) into the 2016 California Existing Building Code (CEBC) **with amendment**.
- Bring forward existing California Amendments from the 2013 California Existing Building Code (CEBC) for adoption into the 2016 California Existing Building Code (CEBC) **with amendment**.
- Repeal 2013 California Amendments which are **not** brought forward into the 2016 California Existing Building Code (CEBC).
- Bring forward existing California Amendments from the 2013 California Building Code (CBC), Chapter 34 without amendment.

---

1. HCD proposes to adopt Chapter 1, Scope and Administration, Division I, California Administration, (Sections 1.1 and 1.8) into the 2016 California Existing Building Code as follows:

CHAPTER 1
SCOPE AND ADMINISTRATION

DIVISION I
CALIFORNIA ADMINISTRATION

SECTION 1.1
GENERAL

1.1.1 Title. *These regulations shall be known as the California Existing Building Code, may be cited as such and will be referred to herein as "this code." The California Existing Building Code is Part 10 of twelve parts of the official compilation and publication of the adoption, amendment and repeal of building regulations to the California Code of Regulations, Title 24, also referred to as the California Building Standards Code. This part incorporates by adoption the 2015 International Existing Building Code of the International Code Council with necessary California amendments.*

1.1.2 Purpose. *The purpose of this code is to establish the minimum requirements to safeguard the public health, safety and general welfare through structural strength, means of egress facilities, stability, access to persons with disabilities, sanitation, adequate lighting and ventilation and energy conservation; safety to life and property from fire and other hazards attributed to the built environment; and to provide safety to fire fighters and emergency responders during emergency operations.*

1.1.3 Scope. *The provisions of this code shall apply to repair, alteration, change of occupancy, addition to and relocation of every existing building or structure or any appurtenances connected or attached to such buildings or structures throughout the State of California.*

> ***1.1.3.1 Nonstate-regulated buildings, structures, and applications.*** *Except as modified by local ordinance pursuant to Section 1.1.8, the following standards in the California Code of Regulations, Title 24, Parts 2, 2.5, 3, 4, 5, 6, 9, 10 and 11 shall apply to all occupancies and applications not regulated by a state agency.*
>
> ***1.1.3.2 State-regulated buildings, structures, and applications.*** *The model code, state amendments to the model code, and/or state amendments where there are no relevant model code provisions shall apply to the following buildings, structures, and applications regulated by state agencies as specified in Sections 1.2 through 1.14, except where modified by local ordinance pursuant to Section 1.1.8. When adopted by a state agency, the*

provisions of this code shall be enforced by the appropriate enforcing agency, but only to the extent of authority granted to such agency by the state legislature.

Note: *See Preface to distinguish the model code provisions from the California provisions.*

1. State-owned buildings, including buildings constructed by the Trustees of the California State University, and to the extent permitted by California laws, buildings designed and constructed by the Regents of the University of California, and regulated by the Building Standards Commission. See Section 1.2 for additional scope provisions.

2. Local detention facilities regulated by the Corrections Standards Authority. See Section 1.3 for additional scope provisions.

3. Barbering, cosmetology or electrolysis establishments, acupuncture offices, pharmacies, veterinary facilities and structural pest control locations regulated by the Department of Consumer Affairs. See Section 1.4 for additional scope provisions.

4. Energy efficiency standards regulated by the California Energy Commission.

5. Dairies and places of meat inspection regulated by the Department of Food and Agriculture. See Section 1.6 for additional scope provisions.

6. Organized camps, laboratory animal quarters, public swimming pools, radiation protection, commissaries serving mobile food preparation vehicles and wild animal quarantine facilities regulated by the Department of Public Health. See Section 1.7 for additional scope provisions.

7. Hotels, motels, lodging houses, apartments, dwellings, dormitories, condominiums, shelters for homeless persons, congregate residences, employee housing, factory-built housing and other types of dwellings containing sleeping accommodations with or without common toilets or cooking facilities. See Section 1.8.2.1.1 for additional scope provisions.

8. Accommodations for persons with disabilities in buildings containing newly constructed covered multifamily dwellings, new common-use areas serving existing covered multifamily dwellings, additions to existing buildings where the addition alone meets the definition of covered multifamily dwelling, and new common-use areas serving new covered multifamily dwellings, which are regulated by the Department of Housing and Community Development. See Section 1.8.2.1.2 for additional scope provisions.

9. Permanent buildings and permanent accessory buildings or structures constructed within mobilehome parks and special occupancy parks regulated by the Department of Housing and Community Development. See Section 1.8.2.1.3 for additional scope provisions.

10. Accommodations for persons with disabilities regulated by the Division of the State Architect. See Section 1.9.1 for additional scope provisions.

11. Public elementary and secondary schools, community college buildings, and state-owned or state-leased essential service buildings regulated by the Division of the State Architect. See Section 1.9.2 for additional scope provisions.

12. Qualified historical buildings and structures and their associated sites regulated by the State Historical Building Safety Board with the Division of the State Architect. See Section 1.9.3 for additional scope provisions.

13. General acute care hospitals, acute psychiatric hospitals, skilled nursing and/or intermediate care facilities, clinics licensed by the Department of Public Health and correctional treatment centers regulated by the Office of Statewide Health Planning and Development. See Section 1.10 for additional scope provisions.

14. Applications regulated by the Office of the State Fire Marshal include, but are not limited to, the following in accordance with Section 1.11:

14.1 Buildings or structures used or intended for use as an:

1 Asylum, jail, prison

2. Mental hospital, hospital, home for the elderly, children's nursery, children's home or institution, school or any similar occupancy of any capacity.

3. Theater, dancehall, skating rink, auditorium, assembly hall, meeting hall, nightclub, fair building or similar place of assemblage where 50 or more persons may gather together in a building,

room or structure for the purpose of amusement, entertainment, instruction, deliberation, worship, drinking or dining, awaiting transportation, or education.

4. Small family day-care homes, large family day-care homes, residential facilities and residential facilities for the elderly, residential care facilities.

5. State institutions or other state-owned or state-occupied buildings.

6. High rise structures.

7. Motion picture production studios.

8. Organized camps.

9. Residential structures.

14.2. Tents, awnings or other fabric enclosures used in connection with any occupancy.

14.3. Fire alarm devices, equipment and systems in connection with any occupancy.

14.4. Hazardous materials, flammable and combustible liquids.

14.5. Public school automatic fire detection, alarm and sprinkler systems.

14.6. Wildland-urban interface fire areas.

15. Public libraries constructed and renovated using funds from the California Library Construction and Renovation Bond Act of 1988 and regulated by the State Librarian. See Section 1.12 for additional scope provisions.

16. Graywater systems regulated by the Department of Water Resources.

17. For applications listed in Section 1.9.1 regulated by the Division of State Architect--Access Compliance, outdoor environments and uses shall be classified according to accessibility uses described in Chapters 11A, 11B and 11C.

18. Marine Oil Terminals regulated by the California State Lands Commission. See Section 1.14 for additional scope provisions.

1.1.4 Appendices. *Provisions contained in the appendices of this code shall not apply unless specifically adopted by a state agency or adopted by a local enforcing agency in compliance with Health and Safety Code Section 18901 et seq. for Building Standards Law, Health and Safety Code Section 17950 for State Housing Law and Health and Safety Code Section 13869.7 for Fire Protection Districts. See Section 1.1.8 of this code.*

1.1.5 Referenced codes. *The codes, standards and publications adopted and set forth in this code, including other codes, standards and publications referred to therein are, by title and date of publication, hereby adopted as standard reference documents of this code. When this code does not specifically cover any subject related to building design and construction, recognized architectural or engineering practices shall be employed. The National Fire Codes, standards and the Fire Protection Handbook of the National Fire Protection Association are permitted to be used as authoritative guides in determining recognized fire prevention engineering practices.*

1.1.6 Nonbuilding standards, orders and regulations. *Requirements contained in the International Existing Building Code, or in any other referenced standard, code or document, which are not building standards as defined in Health and Safety Code Section 18909, shall not be construed as part of the provisions of this code. For nonbuilding standards, orders and regulations, see other titles of the California Code of Regulations.*

1.1.7 Order of precedence and use.

1.1.7.1 Differences. *In the event of any differences between these building standards and the standard reference documents, the text of these building standards shall govern.*

1.1.7.2 Specific provisions. *Where a specific provision varies from a general provision, the specific provision shall apply.*

1.1.7.3 Conflicts. *When the requirements of this code conflict with the requirements of any other part of the California Building Standards Code, Title 24, the most restrictive requirements shall prevail.*

1.1.7.3.1 Detached one-and two-family dwellings. *Detached one-and two-family dwellings, efficiency dwelling units, lodging houses, live/work units, townhouses not more than three stories above grade plane in height with a separate means of egress, and their accessory structures, may be designed and constructed in accordance with the California Residential Code or the California Building Code, but not both, unless the proposed structure(s) or element(s) exceed the design limitations established in the California Residential Code, and the code user is specifically directed by the California Residential Code to use the California Building Code.*

1.1.8 City, county, or city and county amendments, additions or deletions.
The provisions of this code do not limit the authority of city, county, or city and county governments to establish more restrictive and reasonably necessary differences to the provisions contained in this code pursuant to complying with Section 1.1.8.1. The effective date of amendments, additions or deletions to this code by a city, county, or city and county filed pursuant to Section 1.1.8.1 shall be the date filed. However, in no case shall the amendments, additions or deletions to this code be effective any sooner than the effective date of this code.

Local modifications shall comply with Health and Safety Code Section 18941.5 for Building Standards Law, Health and Safety Code Section 17958 for State Housing Law or Health and Safety Code Section 13869.7 for Fire Protection Districts.

1.1.8.1 Findings and filings.

1. *The city, county, or city and county shall make express findings for each amendment, addition or deletion based upon climatic, topographical or geological conditions.*

   Exception: *Hazardous building ordinances and programs mitigating unreinforced masonry buildings.*

2. *The city, county, or city and county shall file the amendments, additions or deletions expressly marked and identified as to the applicable findings. Cities, counties, cities and counties, and fire departments shall file the amendments, additions or deletions, and the findings with the California Building Standards Commission at 2525 Natomas Park Drive, Suite 130, Sacramento, CA 95833.*

3. *Findings prepared by fire protection districts shall be ratified by the local city, county, or city and county and filed with the California Department of Housing and Community Development, Division of Codes and Standards, P.O. Box 1407, Sacramento, CA 95812-1407 or, 2020 W. El Camino Avenue, Suite 250, Sacramento, CA 95833-1829.*

1.1.9 Effective date of this code*. Only those standards approved by the California Building Standards Commission that are effective at the time an application for building permit is submitted shall apply to the plans and specifications for, and to the construction performed under, that permit. For the effective dates of the provisions contained in this code, see the History Note page of this code.*

1.1.10 Availability of codes. *At least one complete copy each of Titles 8, 19, 20, 24 and 25 with all revisions shall be maintained in the office of the building official responsible for the administration and enforcement of this code. Each state department concerned and each city, county, or city and county shall have an up-to-date copy of the code available for public inspection. See Health and Safety Code Section 18942 (e)(1) and (2).*

1.1.11 Format. *This part fundamentally adopts the International Existing Building Code by reference on a chapter-by-chapter basis. When a specific chapter of the International Existing Building Code is not printed in the code and is marked "Reserved" such chapter of the International Existing Building Code is not adopted as a portion of this code. When a specific chapter of the International Existing Building Code is marked "Not adopted by the State of California" but appears in the code, it may be available for adoption by local ordinance.*

Note: *Matrix Adoption Tables at the front of each chapter may aid the code user in determining which chapter or sections within a chapter are applicable to buildings under the authority of a specific state agency, but they are not to be considered regulatory.*

1.1.12 Validity. *If any chapter, section, subsection, sentence, clause or phrase of this code is for any reason held to be unconstitutional, contrary to statute, exceeding the authority of the state as stipulated by statutes or otherwise inoperative, such decision shall not affect the validity of the remaining portion of this code.*

SECTION 1.8
DEPARTMENT OF HOUSING AND COMMUNITY DEVELOPMENT

1.8.1 Purpose. *The purpose of this code is to establish the minimum requirements necessary to protect the health, safety and general welfare of the occupants and the public by governing accessibility, erection, construction, reconstruction, enlargement, conversion, alteration, repair, moving, removal, demolition, occupancy, use, height, court, area, sanitation, ventilation, maintenance and safety to life and property from fire and other hazards attributed to the built environment.*

SECTION 1.8.2
AUTHORITY AND ABBREVIATIONS

1.8.2.1 General. *The Department of Housing and Community Development is authorized by law to promulgate and adopt building standards and regulations for several types of building applications. The applications under the authority of the Department of Housing and Community Development are listed in Sections 1.8.2.1.1 through 1.8.2.1.3.*

Note: See the California Residential Code for detached one-and two-family dwellings and townhouses.

1.8.2.1.1 Housing construction.

Application *- Hotels, motels, lodging houses, apartments, dwellings, dormitories, condominiums, shelters for homeless persons, congregate residences, employee housing, factory-built housing and other types of dwellings containing sleeping accommodations with or without common toilet or cooking facilities including accessory buildings, facilities and uses thereto. Sections of this code which pertain to applications listed in this section are identified using the abbreviation "HCD 1."*

Enforcing Agency *– Local building department or the Department of Housing and Community Development.*

Authority cited*–Health and Safety Code Sections 17040, 17050, 17920.9, 17921, 17921.3, 17921.6, 17921.10, 17922, 17922.6, 17922.12, 17927, 17928, 17959.6, 18300, 18552, 18554, 18620, 18630, 18640, 18670, 18690, 18691, 18865, 18871.3, 18871.4, 18873, 18873.1, 18873.2, 18873.3, 18873.4, 18873.5, 18938.3, 18944.11 and 19990; and Government Code Section 12955.1.*

Reference*–Health and Safety Code Sections 17000 through 17062.5, 17910 through 17995.5, 18200 through 18700, 18860 through 18874, and Sections 19960 through 19997; and Government Code Sections 12955.1 and 12955.1.1.*

1.8.2.1.2 Housing accessibility.

Application *– Covered multifamily dwellings as defined in Chapter 2 of the California Building Code, including but not limited to, lodging houses, dormitories, timeshares, condominiums, shelters for homeless persons, congregate residences, apartments, dwellings, employee housing, factory-built housing and other types of dwellings containing sleeping accommodations with or without common toilet or cooking facilities.*

Sections of this code identified by the abbreviation "HCD 1-AC" require specific accommodations for persons with disabilities as defined in Chapter 2 of the California Building Code. The application of such provisions shall be in conjunction with other requirements of the California Building Code, and apply only to newly constructed covered multifamily dwellings as defined in Chapter 2 of the California Building Code. "HCD 1-AC" applications include, but are not limited to, the following:

1. *All newly constructed covered multifamily dwellings as defined in Chapter 2 of the California Building Code.*
2. *New common use areas as defined in Chapter 2 of the California Building Code, serving existing covered multifamily dwellings.*
3. *Additions to existing buildings, where the addition alone meets the definition of covered multifamily dwellings as defined in Chapter 2 of the California Building Code.*
4. *New common use areas serving new covered multifamily dwellings.*
5. *Where any portion of a building's exterior is preserved, but the interior of the building is removed, including all structural portions of floors and ceilings, the building is considered a new building for determining the application of Chapter 11A of the California Building Code.*

"HCD 1-AC" building standards generally do not apply to public use areas or public accommodations such as hotels and motels, and public housing. Public use areas, public accommodations, and public housing, as defined

in Chapter 2 the California Building Code, are subject to the Division of the State Architect (DSA-AC) in Chapter 11B of the California Building Code, and are referenced in Section 1.9.1.

***Enforcing Agency** – Local building department or the Department of Housing and Community Development.*

***Authority cited**–Health and Safety Code Sections 17040, 17050, 17920.9, 17921, 17921.3, 17921.6, 17921.10, 17922, 17922.6, 17922.12, 17927, 17928, 17959.6, 18300, 18552, 18554, 18620, 18630, 18640, 18670, 18690, 18691, 18865, 18871.3, 18871.4, 18873, 18873.1, 18873.2, 18873.3, 18873.4, 18873.5, 18938.3, 18944.11 and 19990; and Government Code Section 12955.1.*

***Reference** – Health and Safety Code Sections 17000 through 17062.5, 17910 through 17995.5, 18200 through 18700, 18860 through 18874, and 19960 through 19997; and Government Code Sections 12955.1 and 12955.1.1.*

1.8.2.1.3 Permanent buildings in mobilehome parks and special occupancy parks

***Application** – Permanent buildings, and permanent accessory buildings or structures, constructed within mobilehome parks and special occupancy parks that are under the control and ownership of the park operator. Sections of this code which pertain to applications listed in this section are identified using the abbreviation "HCD 2."*

***Enforcing Agency** – The Department of Housing and Community Development, local building department or other local agency that has assumed responsibility for the enforcement of Health and Safety Code, Division 13, Part 2.1, commencing with Section 18200 for mobilehome parks and Health and Safety Code, Division 13, Part 2.3, commencing with Section 18860 for special occupancy parks.*

***Authority cited -** Health and Safety Code Sections 17040, 17050, 17920.9, 17921, 17921.3, 17921.6, 17821.10, 17922, 17922.6, 17922.12, 17927, 17928, 17959.6, 18300, 18552, 18554, 18620, 18630, 18640, 18670, 18690, 18691, 18865, 18871.3, 18871.4, 18873, 18873.1, 18873.2, 18873.3, 18873.4, 18873.5, 18938.3, 18944.11 and 19990; and Government Code Section 12955.1.*

***Reference -** Health and Safety Code Sections 17000 through 17062.5, 17910 through 17995.5, 18200 through 18700, 18860 through 18874, and 19960 through 19997; and Government Code Sections 12955.1 and 12955.1.1.*

SECTION 1.8.3
LOCAL ENFORCING AGENCY

***1.8.3.1 Duties and powers.** The building department of every city, county, or city and county shall enforce all the provisions of law, this code, and the other rules and regulations promulgated by the Department of Housing and Community Development pertaining to the installation, erection, construction, reconstruction, movement, enlargement, conversion, alteration, repair, removal, demolition or arrangement of apartments, condominiums, hotels, motels, lodging houses and dwellings, including accessory buildings, facilities and uses thereto.*

For additional information regarding the use and occupancy of existing buildings and appurtenant structures, see California Code of Regulations, Title 25, Division 1, Chapter 1, Subchapter 1, commencing with Article 1, Section 1.

***1.8.3.2 Laws, rules and regulations.** Other than the building standards contained in this code, and notwithstanding other provisions of law, the statutory authority and location of the laws, rules and regulations to be enforced by local enforcing agencies are listed by statute in Sections 1.8.3.2.1 through 1.8.3.2.5 below:*

***1.8.3.2.1 State Housing Law.** Refer to the State Housing Law, California Health and Safety Code, Division 13, Part 1.5, commencing with Section 17910 and California Code of Regulations, Title 25, Division 1, Chapter 1, Subchapter 1, commencing with Section 1, for the erection, construction, reconstruction, movement, enlargement, conversion, alteration, repair, removal, demolition or arrangement of apartments, condominiums, hotels, motels, lodging houses and dwellings, including accessory buildings, facilities and uses thereto.*

***1.8.3.2.2 Mobilehome Parks Act.** Refer to the Mobilehome Parks Act, California Health and Safety Code, Division 13, Part 2.1, commencing with Section 18200 and California Code of Regulations, Title 25, Division 1, Chapter 2, commencing with Section 1000 for mobilehome park administrative and enforcement authority, permits, plans, fees, violations, inspections and penalties both within and outside mobilehome parks.*

***Exception:** Mobilehome parks where the Department of Housing and Community Development is the enforcing agency.*

1.8.3.2.3 Special Occupancy Parks Act. *Refer to the Special Occupancy Parks Act, California Health and Safety Code, Division 13, Part 2.3, commencing with Section 18860 and California Code of Regulations, Title 25, Division 1, Chapter 2.2, commencing with Section 2000 for special occupancy park administrative and enforcement authority, permits, fees, violations, inspections and penalties both within and outside of special occupancy parks.*

Exception: *Special occupancy parks where the Department of Housing and Community Development is the enforcing agency.*

1.8.3.2.4 Employee Housing Act. *Refer to the Employee Housing Act, California Health and Safety Code, Division 13, Part 1, commencing with Section 17000 and California Code of Regulations, Title 25, Division 1, Chapter 1, Subchapter 3, commencing with Section 600 for employee housing administrative and enforcement authority, permits, fees, violations, inspections and penalties.*

1.8.3.2.5 Factory-Built Housing Law. *Refer to the Factory-Built Housing Law, California Health and Safety Code, Division 13, Part 6, commencing with Section 19960 and California Code of Regulations, Title 25, Division 1, Chapter 3, Subchapter 1, commencing with Section 3000 for factory-built housing administrative and enforcement authority, permits, fees, violations, inspections and penalties.*

SECTION 1.8.4
PERMITS, FEES, APPLICATIONS AND INSPECTIONS

1.8.4.1 Permits. *A written construction permit shall be obtained from the enforcing agency prior to the erection, construction, reconstruction, installation, moving or alteration of any building or structure.*

Exceptions:

1. *Work exempt from permits as specified in Chapter 1, Division II, Scope and Administration, Section 105.2.*
2. *Changes, alterations or repairs of a minor nature not affecting structural features, egress, sanitation, safety or accessibility as determined by the enforcing agency.*

Exemptions from permit requirements shall not be deemed to grant authorization for any work to be done in any manner in violation of other provisions of law or this code.

1.8.4.2 Fees. *Subject to other provisions of law, the governing body of any city, county, or city and county may prescribe fees to defray the cost of enforcement of rules and regulations promulgated by the Department of Housing and Community Development. The amount of the fees shall not exceed the amount reasonably necessary to administer or process permits, certificates, forms or other documents, or to defray the costs of enforcement. For additional information, see the State Housing Law, Health and Safety Code, Division 13, Part 1.5, Section 17951 and California Code of Regulations, Title 25, Division 1, Chapter 1, Subchapter 1, Article 3, commencing with Section 6.*

1.8.4.3 Plan review and time limitations. *Subject to other provisions of law, provisions related to plan checking, prohibition of excessive delays and contracting with or employment of private parties to perform plan checking are set forth in the State Housing Law, Health and Safety Code Section 17960.1, and for employee housing, in Health and Safety Code Section 17021.*

1.8.4.3.1 Retention of plans. *The building department of every city, county, or city and county shall maintain an official copy, microfilm, electronic or other type of photographic copy of the plans of every building, during the life of the building, for which the department issued a building permit.*

Exceptions:

1. Single or multiple dwellings not more than two stories and basement in height.
2. Garages and other structures appurtenant to buildings listed in Exception 1.
3. Farm or ranch buildings appurtenant to buildings listed in Exception 1.
4. Any one-story building where the span between bearing walls does not exceed 25 feet (7620 mm), except a steel frame or concrete building.

All plans for common interest developments as defined in Section 4100 of the California Civil Code shall be retained. For additional information regarding plan retention and reproduction of plans by an enforcing agency, see Health and Safety Code Sections 19850 through 19852.

1.8.4.4 Inspections. *Construction or work for which a permit is required shall be subject to inspection by the building official, and such construction or work shall remain accessible and exposed for inspection purposes until approved. Approval as a result of an inspection shall not be construed to be an approval of a violation of the provisions of this code or other regulations of the Department of Housing and Community Development. Required inspections are listed in Chapter 1, Division II, Scope and Administration, Sections 109.3.1 through 109.3.9.*

SECTION 1.8.5
RIGHT OF ENTRY FOR ENFORCEMENT

1.8.5.1 General. *Subject to other provisions of law, officers and agents of the enforcing agency may enter and inspect public and private properties to secure compliance with the rules and regulations promulgated by the Department of Housing and Community Development. For limitations and additional information regarding enforcement, see the following:*

1. For applications subject to the State Housing Law as referenced in Section 1.8.3.2.1 of this code, refer to Health and Safety Code, Division 13, Part 1.5, commencing with Section 17910 and California Code of Regulations, Title 25, Division 1, Chapter 1, Subchapter 1, commencing with Section 1.

2. For applications subject to the Mobilehome Parks Act as referenced in Section 1.8.3.2.2 of this code, refer to Health and Safety Code, Division 13, Part 2.1, commencing with Section 18200 and California Code of Regulations, Title 25, Division 1, Chapter 2, commencing with Section 1000.

3. For applications subject to the Special Occupancy Parks Act as referenced in Section 1.8.3.2.3 of this code, refer to Health and Safety Code, Division 13, Part 2.3, commencing with Section 18860 and California Code of Regulations, Title 25, Division 1, Chapter 2.2, commencing with Section 2000.

4. For applications subject to the Employee Housing Act as referenced in Section 1.8.3.2.4 of this code, refer to Health and Safety Code, Division 13, Part 1, commencing with Section 17000 and California Code of Regulations, Title 25, Division 1, Chapter 1, Subchapter 3, commencing with Section 600.

5. For applications subject to the Factory-Built Housing Law as referenced in Section 1.8.3.2.5 of this code, refer to Health and Safety Code, Division 13, Part 6, commencing with Section 19960 and California Code of Regulations, Title 25, Division 1, Chapter 3, Subchapter 1, commencing with Section 3000.

SECTION 1.8.6
LOCAL MODIFICATION BY ORDINANCE OR REGULATION

1.8.6.1 General. *Subject to other provisions of law, a city, county, or city and county may make changes to the provisions adopted by the Department of Housing and Community Development. If any city, county, or city and county does not amend, add or repeal by local ordinances or regulations the provisions published in this code or other regulations promulgated by the Department of Housing and Community Development, those provisions shall be applicable and shall become effective 180 days after publication by the California Building Standards Commission. Amendments, additions and deletions to this code adopted by a city, county, or city and county pursuant to California Health and Safety Code Sections 17958.5, 17958.7 and 18941.5, together with all applicable portions of this code, shall also become effective 180 days after publication of the California Building Standards Code by the California Building Standards Commission.*

1.8.6.2 Findings, filings and rejections of local modifications. *Prior to making any modifications or establishing more restrictive building standards, the governing body shall make express findings and filings, as required by California Health and Safety Code Section 17958.7, showing that such modifications are reasonably necessary due to local climatic, geological or topographical conditions. No modification shall become effective or operative unless the following requirements are met:*

1. The express findings shall be made available as a public record.

2. A copy of the modification and express finding, each document marked to cross-reference the other, shall be filed with the California Building Standards Commission for a city, county, or city and county and with the Department of Housing and Community Development for fire protection districts.

3. The California Building Standards Commission has not rejected the modification or change.

Nothing in this section shall limit the authority of fire protection districts pursuant to California Health and Safety Code Section 13869.7(a).

SECTION 1.8.7
ALTERNATE MATERIALS, DESIGNS, TESTS AND METHODS OF CONSTRUCTION

1.8.7.1 General. *The provisions of this code, as adopted by the Department of Housing and Community Development are not intended to prevent the use of any alternate material, appliance, installation, device, arrangement, design or method of construction not specifically prescribed by this code. Consideration and approval of alternates shall comply with Section 1.8.7.2 for local building departments and Section 1.8.7.3 for the Department of Housing and Community Development.*

1.8.7.2 Local building departments. *The building department of any city, county, or city and county may approve alternates for use in the erection, construction, reconstruction, movement, enlargement, conversion, alteration, repair, removal, demolition or arrangement of apartments, condominiums, hotels, motels, lodging houses, dwellings, or accessory structures, except for the following:*

1. Structures located in mobilehome parks as defined in California Health and Safety Code Section 18214.

2. Structures located in special occupancy parks as defined in California Health and Safety Code Section 18862.43.

3. Factory-built housing as defined in California Health and Safety Code Section 19971.

1.8.7.2.1 Approval of alternates. *The consideration and approval of alternates by a local building department shall comply with the following procedures and limitations:*

1. The approval shall be granted on a case-by-case basis.

2. Evidence shall be submitted to substantiate claims that the proposed alternate, in performance, safety and protection of life and health, conforms to, or is at least equivalent to, the standards contained in this code and other rules and regulations promulgated by the Department of Housing and Community Development.

3. The local building department may require tests performed by an approved testing agency at the expense of the owner or owner's agent as proof of compliance.

4. If the proposed alternate is related to accessibility in covered multifamily dwellings or in facilities serving covered multifamily dwellings as defined in Chapter 2 of the California Building Code, the proposed alternate must also meet the threshold set for equivalent facilitation as defined in Chapter 2 of the California Building Code.

For additional information regarding approval of alternates by a building department pursuant to the State Housing Law, see California Health and Safety Code Section 17951(e) and California Code of Regulations, Title 25, Division 1, Chapter 1, Subchapter 1.

1.8.7.3 Department of Housing and Community Development*. The Department of Housing and Community Development may approve alternates for use in the erection, construction, reconstruction, movement, enlargement, conversion, alteration, repair, removal or demolition of apartments, condominiums, hotels, motels, lodging houses, dwellings or an accessory thereto and permanent buildings in mobilehome parks and special occupancy parks. The consideration and approval of alternates shall comply with the following:*

1. The department may require tests at the expense of the owner or owner's agent to substantiate compliance with the California Building Standards Code.

2. The approved alternate shall, for its intended purpose, be at least equivalent in performance and safety to the materials, designs, tests or methods of construction prescribed by this code.

SECTION 1.8.8
APPEALS BOARD

1.8.8.1 General. *Every city, county, or city and county shall establish a process to hear and decide appeals of orders, decisions and determinations made by the enforcing agency relative to the application and interpretation of this code and other regulations governing construction, use, maintenance and change of occupancy. The governing body of any city, county, or city and county may establish a local appeals board and a housing appeals board to serve this purpose. Members of the appeals board(s) shall not be employees of the enforcing agency and shall be knowledgeable in the applicable building codes, regulations and ordinances as determined by the governing body of the city, county, or city and county.*

Where no such appeals boards or agencies have been established, the governing body of the city, county, or city and county shall serve as the local appeals board or housing appeals board as specified in California Health and Safety Code Sections 17920.5 and 17920.6.

1.8.8.2 Definitions. *The following terms shall for the purposes of this section have the meaning shown.*

HOUSING APPEALS BOARD. *The board or agency of a city, county, or city and county which is authorized by the governing body of the city, county, or city and county to hear appeals regarding the requirements of the city, county, or city and county relating to the use, maintenance and change of occupancy of buildings and structures, including requirements governing alteration, additions, repair, demolition and moving. In any area in which there is no such board or agency, "Housing appeals board" means the local appeals board having jurisdiction over the area.*

LOCAL APPEALS BOARD. *The board or agency of a city, county, or city and county which is authorized by the governing body of the city, county, or city and county to hear appeals regarding the building requirements of the city, county, or city and county. In any area in which there is no such board or agency, "Local appeals board" means the governing body of the city, county, or city and county having jurisdiction over the area.*

1.8.8.3 Appeals. *Except as otherwise provided in law, any person, firm or corporation adversely affected by a decision, order or determination by a city, county, or city and county relating to the application of building standards published in the California Building Standards Code, or any other applicable rule or regulation adopted by the Department of Housing and Community Development, or any lawfully enacted ordinance by a city, county, or city and county, may appeal the issue for resolution to the local appeals board or housing appeals board as appropriate.*

The local appeals board shall hear appeals relating to new building construction and the housing appeals board shall hear appeals relating to existing buildings.

SECTION 1.8.9
UNSAFE BUILDINGS OR STRUCTURES

1.8.9.1 Authority to enforce. *Subject to other provisions of law, the administration, enforcement, actions, proceedings, abatement, violations and penalties for unsafe buildings and structures are contained in the following statutes and regulations:*

1. For applications subject to the State Housing Law as referenced in Section 1.8.3.2.1 of this code, refer to Health and Safety Code, Division 13, Part 1.5, commencing with Section 17910 and California Code of Regulations, Title 25, Division 1, Chapter 1, Subchapter 1, commencing with Section 1.

2. For applications subject to the Mobilehome Parks Act as referenced in Section 1.8.3.2.2 of this code, refer to Health and Safety Code, Division 13, Part 2.1, commencing with Section 18200 and California Code of Regulations, Title 25, Division 1, Chapter 2, commencing with Section 1000.

3. For applications subject to the Special Occupancy Parks Act as referenced in Section 1.8.3.2.3 of this code, refer to Health and Safety Code, Division 13, Part 2.3, commencing with Section 18860 and California Code of Regulations, Title 25, Division 1, Chapter 2.2, commencing with Section 2000.

4. For applications subject to the Employee Housing Act as referenced in Section 1.8.3.2.4 of this code, refer to Health and Safety Code, Division 13, Part 1, commencing with Section 17000 and California Code of Regulations, Title 25, Division 1, Chapter 1, Subchapter 3, commencing with Section 600.

5. For applications subject to the Factory-Built Housing Law as referenced in Section 1.8.3.2.5 of this code, refer to Health and Safety Code, Division 13, Part 6, commencing with Section 19960 and California Code of Regulations, Title 25, Division 1, Chapter 3, Subchapter 1, commencing with Section 3000.

1.8.9.2 Actions and proceedings. *Subject to other provisions of law, punishments, penalties and fines for violations of building standards are contained in the following statutes and regulations:*

1. For applications subject to the State Housing Law as referenced in Section 1.8.3.2.1 of this code, refer to Health and Safety Code, Division 13, Part 1.5, commencing with Section 17910 and California Code of Regulations, Title 25, Division 1, Chapter 1, Subchapter 1, commencing with Section 1.

2. For applications subject to the Mobilehome Parks Act as referenced in Section 1.8.3.2.2 of this code, refer to Health and Safety Code, Division 13, Part 2.1, commencing with Section 18200 and California Code of Regulations, Title 25, Division 1, Chapter 2, commencing with Section 1000.

3. For applications subject to the Special Occupancy Parks Act as referenced in Section 1.8.3.2.3 of this code, refer to Health and Safety Code, Division 13, Part 2.3, commencing with Section 18860 and California Code of Regulations, Title 25, Division 1, Chapter 2.2, commencing with Section 2000.

4. For applications subject to the Employee Housing Act as referenced in Section 1.8.3.2.4 of this code, refer to Health and Safety Code, Division 13, Part 1, commencing with Section 17000 and California Code of Regulations, Title 25, Division 1, Chapter 1, Subchapter 3, commencing with Section 600.

5. For applications subject to the Factory-Built Housing Law as referenced in Section 1.8.3.2.5 of this code, refer to Health and Safety Code, Division 13, Part 6, commencing with Section 19960 and California Code of Regulations, Title 25, Division 1, Chapter 3, Subchapter 1, commencing with Section 3000.

SECTION 1.8.10
OTHER BUILDING REGULATIONS

1.8.10.1 Existing structures. *Notwithstanding other provisions of law, the replacement, retention, and extension of original materials and the use of original methods of construction for any existing building or accessory structure, or portions thereof, shall be permitted in accordance with the provisions of this code as adopted by the Department of Housing and Community Development. For additional information, see California Health and Safety Code, Sections 17912, 17920.3, 17922 and 17958.8.*

1.8.10.2 Moved structures. *Subject to the requirements of California Health and Safety Code Sections 17922, 17922.3 and 17958.9, local ordinances or regulations relating to a moved residential building or accessory structure thereto, shall permit the replacement, retention, and extension of original materials and the use of original methods of construction so long as the structure does not become or continue to be a substandard building.*

NOTE:
Authority Cited: Health and Safety Code Sections 17040, 17050, 17920.9, 17921, 17921.3, 17921.6, 17921.10, 17922, 17922.6, 17922.12, 17927, 17928, 17959.6, 18300, 18552, 18554, 18620, 18630, 18640, 18670, 18690, 18691, 18865, 18871.3, 18871.4, 18873, 18873.1, 18873.2, 18873.3, 18873.4, 18873.5, 18938.3, 18944.11 and 19990; and Government Code Section 12955.1.

Reference: Health and Safety Code Sections 17000 through 17062.5, 17910 through 17995.5, 18200 through 18700, 18860 through 18874, and 19960 through 19997; and Government Code Sections 12955.1 and 12955.1.1.

---

2. HCD proposes to adopt Chapter 1, Division II, Sections 105.2 (Building 1 – 6 only), 106.1, 106.2.1, 106.2.4, 106.2.5, 109.3, 109.3.1, 109.3.2, 109.3.3, 109.3.4, 109.3.5, 109.3.6, 109.3.7, 109.3.8, 109.3.9 ONLY from the 2015 International Existing Building Code into the 2016 California Existing Building Code, Chapter 1, Division II with amendments as follows:

DIVISION II
SCOPE AND ADMINISTRATION

Division II is not adopted by the Department of Housing and Community Development except where specifically indicated.

SECTION 109
INSPECTIONS

109.3 Required inspections. … (No change to text)

109.3.3 Lowest floor elevation. For additions and substantial improvements to existing buildings in flood hazard areas, upon placement of the lowest floor, including basement, and prior to further vertical construction, the elevation documentation required in the ~~International~~ *California* Building Code shall be submitted to the code official.

109.3.4 Frame inspection. … (No change to text)

109.3.4.1 Moisture content verification. *Moisture content of framing members shall be verified in accordance with the California Green Building Standards Code (CALGreen), Chapter 4, Division 4.5.*

109.3.7 Other inspections. In addition to the inspections specified above, the code official is authorized to make or require other inspections of any construction work to ascertain compliance with the provisions of this code and other laws ~~that are~~ enforced by the ~~Department of Building Safety~~ *building official*.

Note: *Residential buildings undergoing permitted alterations, additions or improvements shall replace noncompliant plumbing fixtures with water-conserving plumbing fixtures. Plumbing fixture replacement is required prior to issuance of a certificate of final completion, certificate of occupancy or final permit approval by the local building department. See Civil Code Section 1101.1, et seq., for the definition of a noncompliant plumbing fixture, types of residential buildings affected and other important enactment dates.*

109.3.8 Special inspections. Special inspections shall be ~~required~~ in accordance with *Chapter 17 of* the ~~International~~ *California* Building Code.

NOTE:
Authority Cited: Health and Safety Code Sections 17040, 17050, 17920.9, 17921, 17921.3, 17921.6, 17921.10, 17922, 17922.6, 17922.12, 17927, 17928, 17959.6, 18300, 18552, 18554, 18620, 18630, 18640, 18670, 18690, 18691, 18865, 18871.3, 18871.4, 18873, 18873.1, 18873.2, 18873.3, 18873.4, 18873.5, 18938.3, 18944.11 and 19990; and Government Code Section 12955.1.

Reference: Health and Safety Code Sections 17000 through 17062.5, 17910 through 17995.5, 18200 through 18700, 18860 through 18874, and 19960 through 19997; and Government Code Sections 12955.1 and 12955.1.1.

3. HCD proposes to adopt Chapter 2 from the 2015 International Existing Building Code with amendments as follows:

CHAPTER 2
DEFINITIONS

SECTION 201
GENERAL

201.3 Terms defined in other codes. Where terms are not defined in this code and are defined in the other ~~International~~ *California* codes, such terms shall have the meanings ascribed to them in those codes.

SECTION 202
GENERAL DEFINITIONS

CODE OFFICIAL. The officer or other designated authority charged with the administration and enforcement of this code.

(HCD 1 & HCD 2) *"Code Official" shall mean "Building Official" as defined in this code.*

BUILDING. *Any structure used or intended for supporting or sheltering any use or occupancy.*

> ***Exception: (HCD 1, HCD 2 & HCD 1-AC)*** *For applications listed in Section 1.8.2 regulated by the Department of Housing and Community Development, "Building" shall not include the following:*
>
> > *1. Any mobilehome as defined in Health and Safety Code Section 18008.*
> > *2. Any manufactured home as defined in Health and Safety Code Section 18007.*
> > *3. Any commercial modular as defined in Health and Safety Code Section 18001.8 or any special purpose commercial modular as defined in Section 18012.5.*
> > *4. Any recreational vehicle as defined in Section Health and Safety Code 18010.*
> > *5. Any multifamily manufactured home as defined in Health and Safety Code Section 18008.7.*
> >
> > *For additional information, see Health and Safety Code Section 18908.*

Note: *Building shall have the same meaning as defined in Health and Safety Code section 17920 and 18908 for the applications specified in Section 1.11.*

BUILDING OFFICIAL. *The officer or other designated authority charged with the administration and enforcement of this code, or a duly authorized representative.*

NOTE:
Authority Cited: Health and Safety Code Sections 17040, 17050, 17920.9, 17921, 17921.3, 17921.6, 17921.10, 17922, 17922.6, 17922.12, 17927, 17928, 17959.6, 18300, 18552, 18554, 18620, 18630, 18640, 18670, 18690, 18691, 18865, 18871.3, 18871.4, 18873, 18873.1, 18873.2, 18873.3, 18873.4, 18873.5, 18938.3, 18944.11 and 19990; and Government Code Section 12955.1.

Reference: Health and Safety Code Sections 17000 through 17062.5, 17910 through 17995.5, 18200 through 18700, 18860 through 18874, and 19960 through 19997; and Government Code Sections 12955.1 and 12955.1.1.

4. HCD proposes to NOT adopt Chapter 3 from the 2015 International Existing Building Code.

CHAPTER 3
PROVISIONS FOR ALL COMPLIANCE METHODS

NOTE:
Authority Cited: Health and Safety Code Sections 17040, 17050, 17920.9, 17921, 17921.3, 17921.6, 17921.10, 17922, 17922.6, 17922.12, 17927, 17928, 17959.6, 18300, 18552, 18554, 18620, 18630, 18640, 18670, 18690, 18691, 18865, 18871.3, 18871.4, 18873, 18873.1, 18873.2, 18873.3, 18873.4, 18873.5, 18938.3, 18944.11 and 19990; and Government Code Section 12955.1.

Reference: Health and Safety Code Sections 17000 through 17062.5, 17910 through 17995.5, 18200 through 18700, 18860 through 18874, and 19960 through 19997; and Government Code Sections 12955.1 and 12955.1.1.

5. HCD proposes to adopt Chapter 4, except Sections, 401.1.1, 402.5, 403.4.1, 403.5, 403.6, 403.7, 403.8, 403.10, 404.2, 404.2.1, 404.2.2, 404.2.3, 404.3, 404.3.1, 404.4, 405, 406, 408 and 410 from the 2015 International Existing Building Code into the 2016 California Existing Building Code with amendments as follows:

CHAPTER 4
PRESCRIPTIVE COMPLIANCE METHOD

SECTION 401
GENERAL

401.1 (Formerly CBC 3401.1) Scope. The provisions of this chapter shall control the alteration, repair, addition and change of occupancy or relocation of existing buildings and structures~~, including historic buildings and structures as referenced in Section 301.1.1~~.

(HCD 1) *In addition to the requirements in this chapter, maintenance, alteration, repair, addition, or change of occupancy to existing buildings and accessory structures under the authority of the Department of Housing and Community Development, as provided in Section 1.8.2.1.1, shall comply with California Code of Regulations, Title 25, Division 1, Chapter 1, Subchapter 1.*

Exceptions:

1. Existing bleachers, grandstands and folding and telescopic seating shall comply with ICC 300.

2. ***(HCD 2)*** *For moved buildings and maintenance, alteration, repair, addition, or change of occupancy to existing buildings and accessory structures in mobilehome parks or special occupancy parks as provided in Section 1.8.2.1.3. See California Code of Regulations, Title 25, Division 1, Chapters 2 and 2.2.*

3. ***(HCD 1)*** *Limited-density owner-built rural dwellings.*

401.2.1 (Formerly CBC 3401.4.1) Existing materials. Materials already in use in a building in compliance with requirements or approvals in effect at the time of their erection or installation shall be permitted to remain in use unless determined by the building official to be unsafe per Section 115.

(HCD 1) *Local ordinances or regulations shall permit the replacement, retention and extension of original materials, and the use of original methods of construction, for any building or accessory structure, provided such building or structure complied with the building code provisions in effect at the time of original construction and the building or accessory structure does not become or continue to be a substandard building. For additional information, see Health and Safety Code Sections 17912, 17920.3, 17922(d), 17922.3, 17958.8 and 17958.9.*

401.2.3 (Formerly CBC 3401.4.3) Existing seismic force-resisting systems. Where the existing seismic force-resisting system is a type that can be designated ordinary, values of R, Ω_0 and C_d for the existing seismic force-resisting system shall be those specified by the ~~International~~ *California* Building Code for an ordinary system unless it is demonstrated that the existing system will provide performance equivalent to that of a detailed, intermediate or special system.

SECTION 402
ADDITIONS

402.1 (Formerly CBC 3403.1) General. Additions to any building or structure shall comply with the requirements of the ~~International~~ *California* Building Code *or California Residential Code, as applicable,* for new construction. Alterations to the existing building or structure shall be made to ensure that the existing building or structure together with the addition are no less conforming to the provisions of the ~~International~~ *California* Building Code *or California Residential Code, as applicable,* than the existing building or structure was prior to the addition. An existing building together with its additions shall comply with the height and area provisions of Chapter 5 of the ~~International~~ *California* Building Code *or the height provisions of Chapter 3 of the California Residential Code, as applicable.*

402.2 (Formerly CBC 3402.2) Flood hazard areas. For buildings and structures in flood hazard areas established in Section 1612.3 of the ~~International~~ *California* Building Code, or Section R322 of the ~~International~~ *California* Residential Code, as applicable, any addition that constitutes substantial improvement of the existing structure shall comply with the flood design requirements for new construction, and all aspects of the existing structure shall be brought into compliance with the requirements for new construction for flood design.

For buildings and structures in flood hazard areas established in Section 1612.3 of the ~~International~~ *California* Building Code, or Section R322 of the ~~International~~ *California* Residential Code, as applicable, any additions that do not constitute substantial improvement of the existing structure are not required to comply with the flood design requirements for new construction.

402.3 (Formerly CBC 3403.3) Existing structural elements carrying gravity load. Any existing gravity load-carrying structural element for which an addition and its related alterations cause an increase in design gravity load of more than 5 percent shall be strengthened, supplemented, replaced or otherwise altered as needed to carry the increased gravity load required by the ~~International~~ *California* Building Code for new structures. Any existing gravity load-carrying structural element whose gravity load-carrying capacity is decreased shall be considered an altered element subject to the requirements of Section 403.3. Any existing element that will form part of the lateral load path for any part of the addition shall be considered an existing lateral load-carrying structural element subject to the requirements of Section 402.4.

402.3.1 (Formerly CBC 3403.3.1) Design live load. Where the addition does not result in increased design live load, existing gravity load-carrying structural elements shall be permitted to be evaluated and designed for live loads approved prior to the addition. If the approved live load is less than that required by Section 1607 of the ~~International~~ *California* Building Code, the area designed for the nonconforming live load shall be posted with placards of approved design indicating the approved live load. Where the addition does result in increased design live load, the live load required by Section 1607 of the ~~International~~ *California* Building Code shall be used.

402.4 (Formerly CBC 3403.4) Existing structural elements carrying lateral load. Where the addition is structurally independent of the existing structure, existing lateral load-carrying structural elements shall be permitted to remain unaltered. Where the *addition* is not structurally independent of the existing structure, the existing structure and its addition acting together as a single structure shall be shown to meet the requirements of Sections 1609 and 1613 of the ~~International~~ *California* Building Code. ~~For purposes of this section, compliance with ASCE 41, using a Tier 3 procedure and the two-level performance objective in Table 301.1.4.1 for the applicable risk category, shall be deemed to meet the requirements of Section 1613.~~

Exception: Any existing lateral load-carrying structural element whose demand-capacity ratio with the addition considered is no more than 10 percent greater than its demand-capacity ratio with the addition ignored shall be permitted to remain unaltered. For purposes of calculating demand-capacity ratios, the demand shall consider applicable load combinations with design lateral loads or forces in accordance with Sections 1609 and 1613 of the ~~International~~ *California* Building Code. For purposes of this exception, comparisons of demand-capacity ratios and calculation of design lateral loads, forces and capacities shall account for the cumulative effects of additions and alterations since original construction.

402.6 Carbon monoxide detection in existing portions of a building. *Where an addition is made to a Group R occupancy, located in a building with a fuel-burning appliance, fireplace, forced-air furnace, or an attached garage, the existing portion of the building, where no construction is taking place, shall be provided with carbon monoxide detection in accordance with Section 915 of the California Building Code, if carbon monoxide detection is not already installed.*

When the new addition requires carbon monoxide detection, carbon monoxide detection shall be installed in accordance with Section 915 of the California Building Code.

SECTION 403
ALTERATIONS

403.1 (Formerly CBC 3404.1) General. Except as provided by Section 401.2 or this section, alterations to any building or structure shall comply with the requirements of the ~~International~~ *California* Building Code *or California Residential Code, as applicable,* for new construction. Alterations shall be such that the existing building or structure is no less conforming to the provisions of the ~~International~~ *California* Building Code *or California Residential Code, as applicable,* than the existing building or structure was prior to the alteration.

Exceptions:

1. An existing stairway shall not be required to comply with the requirements of Section 1011 of the ~~International~~ *California* Building Code where the existing space and construction does not allow a reduction in pitch or slope.
2. Handrails otherwise required to comply with Section 1011.11 of the ~~International~~ *California* Building Code shall not be required to comply with the requirements of Section 1014.6 of the ~~International~~ *California* Building Code regarding full extension of the handrails where such extensions would be hazardous due to plan configuration.

403.1.1 (Formerly CBC 3404.1.1) Replacement, retention and extension of original materials. (HCD 1) *Local ordinances or regulations shall permit the replacement, retention and extension of original materials, and the use of original methods of construction, for any building or accessory structure, provided such building or structure complied with the building code provisions in effect at the time of original construction and the building or accessory structure does not become or continue to be a substandard building. For additional information, see Health and Safety Code Sections 17912, 17920.3, 17922(d), 17922.3, 17958.8 and 17958.9.*

403.2 (Formerly CBC 3404.2) Flood hazard areas. For buildings and structures in flood hazard areas established in Section 1612.3 of the ~~International~~ *California* Building Code, or Section R322 of the ~~International~~ *California* Residential Code, as applicable, any alteration that constitutes substantial improvement of the existing structure shall comply with the flood design requirements for new construction, and all aspects of the existing structure shall be brought into compliance with the requirements for new construction for flood design.

For buildings and structures in flood hazard areas established in Section 1612.3 of the ~~International~~ *California* Building Code, or Section R322 of the ~~International~~ *California* Residential Code, as applicable, any alterations that do not constitute substantial improvement of the existing structure are not required to comply with the flood design requirements for new construction.

403.3 (Formerly CBC 3404.3) Existing structural elements carrying gravity load. Any existing gravity load-carrying structural element for which an alteration causes an increase in design gravity load of more than 5 percent shall be strengthened, supplemented, replaced or otherwise altered as needed to carry the increased gravity load required by the ~~International~~ *California* Building Code for new structures. Any existing gravity load-carrying structural element whose gravity load-carrying capacity is decreased as part of the alteration shall be shown to have the capacity to resist the applicable design gravity loads required by the ~~International~~ *California* Building Code for new structures.

403.3.1 (Formerly CBC 3404.3.1) Design live load. Where the alteration does not result in increased design live load, existing gravity load-carrying structural elements shall be permitted to be evaluated and designed for live loads approved prior to the alteration. If the approved live load is less than that required by Section 1607 of the ~~International~~ *California* Building Code, the area designed for the nonconforming live load shall be posted with placards of approved design indicating the approved live load. Where the alteration does result in increased design live load, the live load required by Section 1607 of the ~~International~~ *California* Building Code shall be used.

403.4 (Formerly CBC 3404.4) Existing structural elements carrying lateral load. ~~Except as permitted by Section 403.5,~~ ~~w~~*W*here the alteration increases design lateral loads in accordance with Section 1609 or 1613 of the ~~International~~ *California* Building Code, or where the alteration results in a prohibited structural irregularity as defined in ASCE 7, or where the alteration decreases the capacity of any existing lateral load-carrying structural element, the structure of the altered building or structure shall be shown to meet the requirements of Sections 1609 and 1613 of the ~~International~~ *California* Building Code. ~~For purposes of this section, compliance with ASCE 41, using a Tier 3 procedure and the two-level performance objective in Table 301.1.4.1 for the applicable risk category, shall be deemed to meet the requirements of Section 1613 of the International Building Code.~~

Exception: Any existing lateral load-carrying structural element whose demand-capacity ratio with the alteration considered is no more than 10 percent greater than its demand-capacity ratio with the alteration ignored shall be permitted to remain unaltered. For purposes of calculating demand-capacity ratios, the demand shall consider applicable load combinations with design lateral loads or forces in accordance with Sections 1609 and 1613 of the ~~International~~ *California* Building Code. For purposes of this exception, comparisons of demand-capacity ratios and calculation of design lateral loads, forces and capacities shall account for the cumulative effects of additions and alterations since original construction.

403.9 (Formerly CBC 3404.5) Voluntary seismic improvements. Alterations to existing structural elements or additions of new structural elements that are not otherwise required by this chapter and are initiated for the purpose of improving the performance of the seismic force-resisting system of an existing structure or the performance of seismic bracing or anchorage of existing nonstructural elements shall be permitted, provided that an engineering analysis is submitted demonstrating the following:

1. The altered structure and the altered nonstructural elements are no less conforming to the provisions of the ~~International~~ *California* Building Code with respect to earthquake design than they were prior to the alteration.
2. New structural elements are detailed as required for new construction.
3. New or relocated nonstructural elements are detailed and connected to existing or new structural elements as required for new construction.
4. The alterations do not create a structural irregularity as defined in ASCE 7 or make an existing structural irregularity more severe.

403.11 Refuge areas. … (No change to text)

403.11.1 Smoke compartments. In Group I-2 and I-3 occupancies, the required capacity of the refuge areas for smoke compartments in accordance with Sections 407.5.1 and 408.6.2 of the ~~International~~ *California* Building Code shall be maintained.

403.11.2 Ambulatory care. In ambulatory care facilities required to be separated by Section 422.2 of the ~~International~~ *California* Building Code, the required capacity of the refuge areas for smoke compartments in accordance with Section 422.4 of the ~~International~~ *California* Building Code shall be maintained.

403.11.3 Horizontal exits. The required capacity of the refuge area for horizontal exits in accordance with Section 1026.4 of the ~~International~~ *California* Building Code shall be maintained.

403.12 Carbon monoxide detection. *Pursuant to Health and Safety Code Section 17926, carbon monoxide detection shall be provided in all existing Group R buildings, as required in Section 915 of the California Building Code, or Section R315 of the California Residential Code.*

When a fuel-burning appliance, fireplace, or forced-air furnace are added to an existing Group R building, not previously required to be provided with carbon monoxide detection, new carbon monoxide detection shall be installed in accordance with Section 915 of the California Building Code, or Section R315 of the California Residential Code.

SECTION 404
REPAIRS

404.1.1* (Formerly CBC 3405.1.2) *Replacement, retention and extension of original materials. (HCD 1) *Local ordinances or regulations shall permit the replacement, retention and extension of original materials, and the use of original methods of construction, for any building or accessory structure, provided such building or structure complied with the building code provisions in effect at the time of original construction and the building or accessory structure does not become or continue to be a substandard building. For additional information, see Health and Safety Code Sections 17912, 17920.3, 17922(d), 17922.3, 17958.8 and 17958.9.*

404.5 (Formerly CBC 3405.5) Flood hazard areas. For buildings and structures in flood hazard areas established in Section 1612.3 of the ~~International~~ *California* Building Code, or Section R322 of the ~~International~~ *California* Residential Code, as applicable, any repair that constitutes substantial improvement or repair of substantial damage of the existing structure shall comply with the flood design requirements for new construction, and all aspects of the existing structure shall be brought into compliance with the requirements for new construction for flood design.

For buildings and structures in flood hazard areas established in Section 1612.3 of the ~~International~~ *California* Building Code, or Section R322 of the ~~International~~ *California* Residential Code, as applicable, any repairs that do not constitute substantial improvement or repair of substantial damage of the existing structure are not required to comply with the flood design requirements for new construction.

SECTION 407
CHANGE OF OCCUPANCY

407.1 (Formerly CBC 3408.1) Conformance. No change shall be made in the use or occupancy of any building unless such building is made to comply with the requirements of the ~~International~~ *California* Building Code for the use or occupancy. Changes in use or occupancy in a building or portion thereof shall be such that the existing building is no less complying with the provisions of this code than the existing building or structure was prior to the change. Subject to the approval of the building official, the use or occupancy of existing buildings shall be permitted to be changed and the building is allowed to be occupied for purposes in other groups without conforming to all of the requirements of this code for those groups, provided the new or proposed use is less hazardous, based on life and fire risk, than the existing use.

Exception: The building need not be made to comply with the seismic requirements for a new structure unless required by Section 407.4.

407.1.1 Change in the character of use. A change in occupancy with no change of occupancy classification shall not be made to any structure that will subject the structure to any special provisions of the applicable ~~International~~ *California* codes, without approval of the building official. Compliance shall be only as necessary to meet the specific provisions and is not intended to require the entire building be brought into compliance.

407.3 (Formerly CBC 3408.3) Stairways. An existing stairway shall not be required to comply with the requirements of Section 1011 of the ~~International~~ *California* Building Code where the existing space and construction does not allow a reduction in pitch or slope.

407.4 (Formerly CBC 3408.4) Structural. When a change of occupancy results in a structure being reclassified to a higher risk category, the structure shall conform to the seismic requirements for a new structure of the higher risk category. ~~For purposes of this section, compliance with ASCE 41, using a Tier 3 procedure and the two-level performance objective in Table 301.1.4.1 for the applicable risk category, shall be deemed to meet the requirements of Section 1613 of the International Building Code.~~

Exceptions:

1. Specific seismic detailing requirements of Section 1613 of the ~~International~~ *California* Building Code for a new structure shall not be required to be met where the seismic performance is shown to be equivalent to

that of a new structure. A demonstration of equivalence shall consider the regularity, overstrength, redundancy and ductility of the structure.

2. When a change of use results in a structure being reclassified from Risk Category I or II to Risk Category III and the structure is located where the seismic coefficient, SDS, is less than 0.33, compliance with the seismic requirements of Section 1613 of the ~~International~~ *California* Building Code is not required.

SECTION 409
MOVED STRUCTURES

409.1 (Formerly CBC 3410.1) Conformance. Structures moved into or within the jurisdiction shall comply with the provisions of this code for new structures.

Exception: (HCD 1 & HCD 2) *After July 1, 1978, local ordinances or regulations for moved apartment houses and dwellings shall permit the retention of existing materials and methods of construction, provided the apartment house or dwelling complies with the building standards for foundations applicable to new construction and does not become or continue to be a substandard building. For additional information, see Health and Safety Code Section 17958.9.*

NOTE:
Authority Cited: Health and Safety Code Sections 17040, 17050, 17920.9, 17921, 17921.3, 17921.6, 17921.10, 17922, 17922.6, 17922.12, 17927, 17928, 17959.6, 18300, 18552, 18554, 18620, 18630, 18640, 18670, 18690, 18691, 18865, 18871.3, 18871.4, 18873, 18873.1, 18873.2, 18873.3, 18873.4, 18873.5, 18938.3, 18944.11 and 19990; and Government Code Section 12955.1.

Reference: Health and Safety Code Sections 17000 through 17062.5, 17910 through 17995.5, 18200 through 18700, 18860 through 18874, and 19960 through 19997; and Government Code Sections 12955.1 and 12955.1.1.

6. HCD proposes to NOT adopt Chapter 5 from the 2015 International Existing Building Code.

CHAPTER 5
CLASSIFICATION OF WORK

NOTE:
Authority Cited: Health and Safety Code Sections 17040, 17050, 17920.9, 17921, 17921.3, 17921.6, 17921.10, 17922, 17922.6, 17922.12, 17927, 17928, 17959.6, 18300, 18552, 18554, 18620, 18630, 18640, 18670, 18690, 18691, 18865, 18871.3, 18871.4, 18873, 18873.1, 18873.2, 18873.3, 18873.4, 18873.5, 18938.3, 18944.11 and 19990; and Government Code Section 12955.1.

Reference: Health and Safety Code Sections 17000 through 17062.5, 17910 through 17995.5, 18200 through 18700, 18860 through 18874, and 19960 through 19997; and Government Code Sections 12955.1 and 12955.1.1.

7. HCD proposes to NOT adopt Chapter 6 from the 2015 International Existing Building Code.

CHAPTER 6
REPAIRS

NOTE:
Authority Cited: Health and Safety Code Sections 17040, 17050, 17920.9, 17921, 17921.3, 17921.6, 17921.10, 17922, 17922.6, 17922.12, 17927, 17928, 17959.6, 18300, 18552, 18554, 18620, 18630, 18640, 18670, 18690, 18691, 18865, 18871.3, 18871.4, 18873, 18873.1, 18873.2, 18873.3, 18873.4, 18873.5, 18938.3, 18944.11 and 19990; and Government Code Section 12955.1.

Reference: Health and Safety Code Sections 17000 through 17062.5, 17910 through 17995.5, 18200 through 18700, 18860 through 18874, and 19960 through 19997; and Government Code Sections 12955.1 and 12955.1.1.

8. HCD proposes to NOT adopt Chapter 7 from the 2015 International Existing Building Code.

CHAPTER 7
ALTERATIONS—LEVEL 1

NOTE:
Authority Cited: Health and Safety Code Sections 17040, 17050, 17920.9, 17921, 17921.3, 17921.6, 17921.10, 17922, 17922.6, 17922.12, 17927, 17928, 17959.6, 18300, 18552, 18554, 18620, 18630, 18640, 18670, 18690, 18691, 18865, 18871.3, 18871.4, 18873, 18873.1, 18873.2, 18873.3, 18873.4, 18873.5, 18938.3, 18944.11 and 19990; and Government Code Section 12955.1.

Reference: Health and Safety Code Sections 17000 through 17062.5, 17910 through 17995.5, 18200 through 18700, 18860 through 18874, and 19960 through 19997; and Government Code Sections 12955.1 and 12955.1.1.

9. HCD proposes to NOT adopt Chapter 8 from the 2015 International Existing Building Code.

CHAPTER 8
ALTERATIONS—LEVEL 2

NOTE:
Authority Cited: Health and Safety Code Sections 17040, 17050, 17920.9, 17921, 17921.3, 17921.6, 17921.10, 17922, 17922.6, 17922.12, 17927, 17928, 17959.6, 18300, 18552, 18554, 18620, 18630, 18640, 18670, 18690, 18691, 18865, 18871.3, 18871.4, 18873, 18873.1, 18873.2, 18873.3, 18873.4, 18873.5, 18938.3, 18944.11 and 19990; and Government Code Section 12955.1.

Reference: Health and Safety Code Sections 17000 through 17062.5, 17910 through 17995.5, 18200 through 18700, 18860 through 18874, and 19960 through 19997; and Government Code Sections 12955.1 and 12955.1.1.

10. HCD proposes to NOT adopt Chapter 9 from the 2015 International Existing Building Code.

CHAPTER 9
ALTERATIONS—LEVEL 3

NOTE:
Authority Cited: Health and Safety Code Sections 17040, 17050, 17920.9, 17921, 17921.3, 17921.6, 17921.10, 17922, 17922.6, 17922.12, 17927, 17928, 17959.6, 18300, 18552, 18554, 18620, 18630, 18640, 18670, 18690, 18691, 18865, 18871.3, 18871.4, 18873, 18873.1, 18873.2, 18873.3, 18873.4, 18873.5, 18938.3, 18944.11 and 19990; and Government Code Section 12955.1.

Reference: Health and Safety Code Sections 17000 through 17062.5, 17910 through 17995.5, 18200 through 18700, 18860 through 18874, and 19960 through 19997; and Government Code Sections 12955.1 and 12955.1.1.

11. HCD proposes to NOT adopt Chapter 10 from the 2015 International Existing Building Code.

CHAPTER 10
CHANGE OF OCCUPANCY

NOTE:
Authority Cited: Health and Safety Code Sections 17040, 17050, 17920.9, 17921, 17921.3, 17921.6, 17921.10, 17922, 17922.6, 17922.12, 17927, 17928, 17959.6, 18300, 18552, 18554, 18620, 18630, 18640, 18670, 18690, 18691, 18865, 18871.3, 18871.4, 18873, 18873.1, 18873.2, 18873.3, 18873.4, 18873.5, 18938.3, 18944.11 and 19990; and Government Code Section 12955.1.

Reference: Health and Safety Code Sections 17000 through 17062.5, 17910 through 17995.5, 18200 through 18700, 18860 through 18874, and 19960 through 19997; and Government Code Sections 12955.1 and 12955.1.1.

---

12. HCD proposes to NOT adopt Chapter 11 from the 2015 International Existing Building Code.

CHAPTER 11
ADDITIONS

NOTE:
Authority Cited: Health and Safety Code Sections 17040, 17050, 17920.9, 17921, 17921.3, 17921.6, 17921.10, 17922, 17922.6, 17922.12, 17927, 17928, 17959.6, 18300, 18552, 18554, 18620, 18630, 18640, 18670, 18690, 18691, 18865, 18871.3, 18871.4, 18873, 18873.1, 18873.2, 18873.3, 18873.4, 18873.5, 18938.3, 18944.11 and 19990; and Government Code Section 12955.1.

Reference: Health and Safety Code Sections 17000 through 17062.5, 17910 through 17995.5, 18200 through 18700, 18860 through 18874, and 19960 through 19997; and Government Code Sections 12955.1 and 12955.1.1.

---

13. HCD proposes to NOT adopt Chapter 12 from the 2015 International Existing Building Code.

CHAPTER 12
HISTORIC BUILDINGS

NOTE:
Authority Cited: Health and Safety Code Sections 17040, 17050, 17920.9, 17921, 17921.3, 17921.6, 17921.10, 17922, 17922.6, 17922.12, 17927, 17928, 17959.6, 18300, 18552, 18554, 18620, 18630, 18640, 18670, 18690, 18691, 18865, 18871.3, 18871.4, 18873, 18873.1, 18873.2, 18873.3, 18873.4, 18873.5, 18938.3, 18944.11 and 19990; and Government Code Section 12955.1.

Reference: Health and Safety Code Sections 17000 through 17062.5, 17910 through 17995.5, 18200 through 18700, 18860 through 18874, and 19960 through 19997; and Government Code Sections 12955.1 and 12955.1.1.

---

14. HCD proposes to NOT adopt Chapter 13 from the 2015 International Existing Building Code.

CHAPTER 13
RELOCATED OR MOVED BUILDINGS

NOTE:
Authority Cited: Health and Safety Code Sections 17040, 17050, 17920.9, 17921, 17921.3, 17921.6, 17921.10, 17922, 17922.6, 17922.12, 17927, 17928, 17959.6, 18300, 18552, 18554, 18620, 18630, 18640, 18670, 18690, 18691, 18865, 18871.3, 18871.4, 18873, 18873.1, 18873.2, 18873.3, 18873.4, 18873.5, 18938.3, 18944.11 and 19990; and Government Code Section 12955.1.

Reference: Health and Safety Code Sections 17000 through 17062.5, 17910 through 17995.5, 18200 through 18700, 18860 through 18874, and 19960 through 19997; and Government Code Sections 12955.1 and 12955.1.1.

15. HCD proposes to NOT adopt Chapter 14 from the 2015 International Existing Building Code.

CHAPTER 14
PERFORMANCE COMPLIANCE METHODS

NOTE:
Authority Cited: Health and Safety Code Sections 17040, 17050, 17920.9, 17921, 17921.3, 17921.6, 17921.10, 17922, 17922.6, 17922.12, 17927, 17928, 17959.6, 18300, 18552, 18554, 18620, 18630, 18640, 18670, 18690, 18691, 18865, 18871.3, 18871.4, 18873, 18873.1, 18873.2, 18873.3, 18873.4, 18873.5, 18938.3, 18944.11 and 19990; and Government Code Section 12955.1.

Reference: Health and Safety Code Sections 17000 through 17062.5, 17910 through 17995.5, 18200 through 18700, 18860 through 18874, and 19960 through 19997; and Government Code Sections 12955.1 and 12955.1.1.

16. HCD proposes to adopt Chapter 15, Sections 1501, 1502 and 1503 only, from the 2015 International Existing Building Code into the 2016 California Existing Building Code with amendments as follows:

CHAPTER 15
CONSTRUCTION SAFEGUARDS

1501.5 Fire safety during construction. Fire safety during construction shall comply with the applicable requirements of the ~~International~~ *California* Building Code and the applicable provisions of Chapter 33 of the ~~International~~ *California* Fire Code.

1501.6.1 Walkways. A walkway shall be provided for pedestrian travel in front of every construction and demolition site unless the applicable governing authority authorizes the sidewalk to be fenced or closed. Walkways shall be of sufficient width to accommodate the pedestrian traffic, but in no case shall they be less than 4 feet (1219 mm) in width. Walkways shall be provided with a durable walking surface. Walkways shall be accessible in accordance with ~~Chapter 11~~ *Chapter 11A* of the ~~International~~ *California* Building Code and shall be designed to support all imposed loads and in no case shall the design live load be less than 150 pounds per square foot (psf) (7.2 kN/m2).

1501.6.4.1 Barrier design. Barriers shall be designed to resist loads required in Chapter 16 of the ~~International~~ *California* Building Code unless constructed as follows:

1. Barriers shall be provided with 2 × 4 top and bottom plates.
2. The barrier material shall be a minimum of ¾ inch (19.1 mm) boards or 1/4 inch (6.4 mm) wood structural use panels.
3. Wood structural use panels shall be bonded with an adhesive identical to that for exterior wood structural use panels.
4. Wood structural use panels 1/4 inch (6.4 mm) or 1/16 inch (1.6 mm) in thickness shall have studs spaced not more than 2 feet (610 mm) on center.

5. Wood structural use panels 3 /8 inch (9.5 mm) or 1 /2 inch (12.7 mm) in thickness shall have studs spaced not more than 4 feet (1219 mm) on center, provided a 2-inch by 4-inch (51 mm by 102 mm) stiffener is placed horizontally at the mid-height where the stud spacing exceeds 2 feet (610 mm) on center.

6. Wood structural use panels 5/8 inch (15.9 mm) or thicker shall not span over 8 feet (2438 mm).

1501.6.7 Adjacent to excavations. Every excavation on a site located 5 feet (1524 mm) or less from the street lot line shall be enclosed with a barrier not less than 6 feet (1829 mm) high. Where located more than 5 feet (1524 mm) from the street lot line, a barrier shall be erected when required by the code official. Barriers shall be of adequate strength to resist wind pressure as specified in Chapter 16 of the ~~International~~ *California* Building Code.

1501.7 Facilities required. Sanitary facilities shall be provided during construction or demolition activities in accordance with the ~~International~~ *California* Plumbing Code.

NOTE:
Authority Cited: Health and Safety Code Sections 17040, 17050, 17920.9, 17921, 17921.3, 17921.6, 17921.10, 17922, 17922.6, 17922.12, 17927, 17928, 17959.6, 18300, 18552, 18554, 18620, 18630, 18640, 18670, 18690, 18691, 18865, 18871.3, 18871.4, 18873, 18873.1, 18873.2, 18873.3, 18873.4, 18873.5, 18938.3, 18944.11 and 19990; and Government Code Section 12955.1.

Reference: Health and Safety Code Sections 17000 through 17062.5, 17910 through 17995.5, 18200 through 18700, 18860 through 18874, and 19960 through 19997; and Government Code Sections 12955.1 and 12955.1.1.

17. HCD proposes to adopt Chapter 16 from the 2015 International Existing Building Code into the 2016 California Existing Building Code with amendments as follows:

CHAPTER 16
REFERENCED STANDARDS

This chapter lists the standards that are referenced in various sections of this document. The standards are listed herein by the promulgating agency of the standard, the standard identification, the effective date and title, and the section or sections of this document that reference the standard. The application of the referenced standards shall be as specified in Section 102.4*, or California Administration Division I, as applicable*.

ASCE/SEI	American Society of Civil Engineers Structural Engineers Institute 1801 Alexander Bell Drive Reston, VA 20191-4400	
Standard Reference Number	Title	Referenced in code section number
7-10 ~~41-13~~	Minimum Design Loads for Buildings and Other Structures with Supplement No. 1……. ~~Seismic Evaluation and Retrofit of Existing Buildings~~…….	~~301.1.4.1,~~ 403.4, 403.9~~, 807.5~~ ~~301.1.4, 301.1.4.1, Table 301.1.4.1, 301.1.4.2, Table 301.1.4.2, 402.4, Table 402.4, 403.4, 404.2.1, Table 404.2.1, 404.2.3,~~ 407.4
ASHRAE	American Society of Heating, Refrigerating and Air Conditioning Engineers 1791 Tullie Circle, NE Atlanta, GA 30329	
Standard Reference		Referenced in code

Number	Title	section number
~~62.1-2013~~	~~Ventilation for Acceptable Indoor Air Quality……~~	~~809.2~~
ASME	American Society of Mechanical Engineers 3 Park Avenue New York, NY 10016	
Standard Reference Number	Title	Referenced in code section number
~~ASME A17.1/ CSA B44-2013~~ ~~A17.3-2008~~ ~~A18.1-2008~~	~~Safety Code for Elevators and Escalators……~~ ~~Safety Code for Existing Elevators and Escalators….~~ ~~Safety Standards for Platform Lifts and Stairway Chair Lifts……~~	~~410.8.2, 705.1.2,902.1.2~~ ~~902.1.2~~ ~~410.8.3, 705.1.3~~
ASTM	ASTM International 100 Barr Harbor Drive West Conshohocken, PA 19428-2959	
Standard Reference Number	Title	Referenced in code section number
C 94/C94M—13 ~~E 84—13A~~ ~~E 108—11~~ ~~E 136—2012~~ F 2006—10 ~~F 2090—10~~	Specification for Ready-mixed Concrete . …… ~~Test Method for Surface Burning Characteristics of Building Materials……~~ ~~Standard Test Methods for Fire Tests of Roof Coverings……~~ ~~Test Method for Behavior of Materials in a Vertical Tube Furnace at 750°C ……..~~ Standard Safety Specification for Window Fall ~~Prevention Devices for Non Emergency Escape (Egress) and Rescue (Ingress) Windows ……~~ ~~Standard Specification for Window Fall Prevention Devices with Emergency (Egress) Release Mechanisms……~~	109.3.1 ~~1205.9~~ ~~1205.5~~ ~~202~~ ~~406.2, 702.4~~ ~~406.2, 702.4, 705.5~~
ICC	International Code Council, Inc. 500 New Jersey Avenue, NW, 6th Floor Washington, DC 20001	
Standard Reference Number	Title	Referenced in code section number
~~IBC—15~~	~~International Building Code®……~~	~~101.4.1, 106.2.2, 109.3.3, 109.3.8, 110.2, 202, 301.1, 301.1.4 301.1.4.1, 301.1.4.2 401.2.3, 402.1, 402.2, 402.3, 402.3.1, 402.4, 403.1, 403.2, 403.3, 403.3.1, 403.4, 403.4.1, 403.8, 403.9, 404.2.1, 404.2.3, 404.3, 404.4, 404.5, 406.3, 407.1, 407.3,407.4, 408.3, 410.4, 410.4.2, 410.6, 410.8.1, 410.8.4, 410.8.6, 410.8.5, 410.8.7, 410.8.8, 410.8.10, 410.8.14, 410.9, 410.9.3, 410.9.4, 501.3, 601.3, 602.3, 606.1, 606.2.2.1, 606.2.2.3, 606.2.3, 606.2.4 701.2, 701.3, 702.1, 702.2, 702.3, 702.4, 702.5, 702.6, 705.1, 705.1.1, 705.1.4, 705.1.7, 705.1.8, 705.1.9,706.1, 706.3, 706.3.2, 707.2, 707.3.1, 707.3.2 801.3, 802.1, 803.2.1, 803.2.3, 803.3, 803.4, 803.5.2, 803.6, 804.1.1,~~

		~~804.2, 804.2.2, 804.2.3, 804.2.4, 804.3, 805.3.1, 805.3.1.2.1, 805.4.3, 805.5, 805.6, 805.7.1, 805.8.1, 805.9.2, 805.10.1.1, 805.10.1.2, 805.10.1.3, 805.10.2, 805.11.2, 806.2, 806.3, 806.4, 806.5, 807.2, 807.4, 807.5, 807.6 904.1.2, 904.1.3, 904.2, 904.2.1, 904.2.2, 905.2, 905.3, 906.2, 907.4, 907.4.2 1001.3, 1002.1, 1002.2, 1007.1, 1007.2, 1007.3.1, 1011.1, 1012.1.1.1, 1012.1.1.2, 1012.2.1, 1012.2.2, 1012.3, 1012.4.1, 1012.4.2, 1012.4.3, 1012.5.1, 1012.5.1.1, 1012.5.3, 1012.6.1, 1012.6.3, 1012.7.1, 1012.7.2, 1012.7.3, 1012.8, 1012.8.2 1102.1, 1102.2, 1102.3, 1103.1, 1103.2, 1103.3, 1103.3.1, 1103.3.2, 1103.4, 1103.5, 1201.4, 1202.3, 1202.4, 1203.12, 1204.1, 1204.1.4, 1205.2, 1205.9, 1205.15, 1301.2, 1302.1, 1302.2, 1302.2.1, 1302.3, 1302.4, 1302.5, 1302.6, 1401.2.2, 1401.2.3, 1401.2.4, 1401.3.3, 1401.4.1, 1401.6.1, 1401.6.1.1, 1401.6.2, 1401.6.2.1, 1401.6.3.1, 1401.6.3.2, 1401.6.4.1, 1401.6.5, 1401.6.5.1, 1401.6.6, 1401.6.7.1, 1401.6.8, 1401.6.9, 1401.6.9.1, 1401.6.10, 1401.6.10.1, 1401.6.11, 1401.6.11.1, 1401.6.12.1, 1401.6.13, 1401.6.15.1, 1401.6.16.1, 1401.6.17, 1401.6.17.1, 1401.6.18, 1401.6.18.1, 1401.6.19, Table 1401.6.19, 1501.5, 1501.6.1, 1501.6.4.1, 1501.6.7, 1506.1, 1506.3~~
~~ICC A117.1—09~~	~~Accessible and Usable Buildings and Facilities~~…….	~~410.8.2, 410.8.3, 410.8.10, 705.1.2, 705.1.3~~
ICC 300—12	ICC Standard on Bleachers, Folding and Telescopic Seating and Grandstands……	401.1
~~IECC—15~~	~~International Energy Conservation Code®~~.....	~~301.2, 702.6, 708.1, 811.1, 908.1~~
~~IFC—15~~	~~International Fire Code®~~ ……	~~101.4.2, 301.1.1, 301.2, 402.5, 403.10, 803.2.1, 803.2.3, 804.4.1.1, 804.4.1.2, 804.4.1.3, 804.4.1.4, 804.4.1.5, 804.4.1.6, 804.4.1.7, 804.4.3, 1012.5.1.1, 1104.1, 1301.2, 1401.3.2, 1401.6.8.1, 1401.6.14,~~

~~IFGC—15~~	~~International Fuel Gas Code®~~ ……	~~1401.6.14.1, 1501.5, 1504.1, 1504.2~~
~~IMC—15~~	~~International Mechanical Code®~~ . . ……	~~301.2, 702.6.1~~
~~IPC—15~~	~~International Plumbing Code®~~ ……	~~301.2, 702.6, 809.1, 902.1.1, 902.2.1, 1009.1, 1401.6.7.1401.6.8, 1401.6.8.1~~
~~IPMC—15~~	~~International Property Maintenance Code®~~……	~~301.2, 609.1, 702.6, 810.1, 1010.1, 1010.2, 1010.3, 1010.5, 1501.7~~ 101.4.2, ~~301.2, 1301.2, 1401.3.2~~
~~IRC—15~~	~~International Residential Code®~~ ……	~~101.4.1, 301.2~~, 402.2, 403.2, 404.5, ~~408.3, 602.3,701.3, 702.5, 706.2, 707.2, 707.4, 707.5, 708.1 807.4, 808.3, 811.1, 907.4, 908.1, 1103.2, 1103.3, 1103.4, 1104.1, 1106.1, 1201.4, 1301.2, 1302.1, 1302.2, 1302.2.1, 1302.3, 1302.4, 1302.6, 1302.5, 1401.2.2, 1401.2.3, 1401.3.3~~
NFPA	National Fire Protection Agency 1 Batterymarch Park Quincy, MA 02269-9101	
Standard Reference Number	Title	Referenced in code section number
~~NFPA 13R—13~~	~~Standard for the Installation of Sprinkler Systems in Residential Occupancies up to and Including Four Stories in Height……~~	~~804.2.5~~
~~NFPA 70—14~~	~~National Electrical Code……~~	~~107.3, 301.2, 607.1.1, 607.1.2, 607.1.3, 607.1.4, 607.1.5, 808.1, 808.3.4, 808.3.7, 1008.1, 1008.2, 1008.3, 1008.4~~
~~NFPA 72—13~~	~~National Fire Alarm and Signaling Code……~~	~~804.2.5, 804.4~~
~~NFPA 99—15~~	~~Health Care Facilities Code……~~	~~607.1.4~~
~~NFPA 101—15~~	~~Life Safety Code……~~	~~805.2~~
UL	UL LLC 333 Pfingsten Road Northbrook, IL 60062	
Standard Reference Number	Title	Referenced in code section number
~~723—08~~	~~Standard for Test for Surface Burning Characteristics of Building Materials with Revisions Through September 2010 ……~~	~~1205.9~~
~~790—04~~	~~Standard Test Methods for Fire Tests of Roof~~	

	~~Coverings with Revisions through October 2008…..~~	~~1205.5~~

NOTE:
Authority Cited: Health and Safety Code Sections 17040, 17050, 17920.9, 17921, 17921.3, 17921.6, 17921.10, 17922, 17922.6, 17922.12, 17927, 17928, 17959.6, 18300, 18552, 18554, 18620, 18630, 18640, 18670, 18690, 18691, 18865, 18871.3, 18871.4, 18873, 18873.1, 18873.2, 18873.3, 18873.4, 18873.5, 18938.3, 18944.11 and 19990; and Government Code Section 12955.1.

Reference: Health and Safety Code Sections 17000 through 17062.5, 17910 through 17995.5, 18200 through 18700, 18860 through 18874, and 19960 through 19997; and Government Code Sections 12955.1 and 12955.1.1.

---

18. HCD proposes to adopt Appendix A, Chapter A1 (Sections A100 – A114, Tables A1-A – A1-G, and Figures A1-1 and A1-2) from the 2015 International Existing Building Code into the 2016 California Existing Building Code with amendments as follows:

CHAPTER A1
SEISMIC STRENGTHENING PROVISIONS
FOR UNREINFORCED MASONRY BEARING WALL BUILDINGS

SECTION A100
APPLICATION

A100.1 Vesting Authority. *When adopted by a state agency, the provisions of these regulations shall be enforced by the appropriate enforcing agency, but only to the extent of authority granted to such agency by the state legislature.*

Following is a list of the state agencies that adopt building standards, the specific scope of application of the agency responsible for enforcement, and the specific statutory authority of each agency to adopt and enforce such provisions of building standards of this code, unless otherwise stated.

2. HCD 1 – The Department of Housing and Community Development.

Application *– Hotels, motels, lodging houses, apartments, dwellings, employee housing and factory-built housing.*

Enforcing Agency – The local building department or the Department of Housing and Community Development.

Authority Cited – Health and Safety Code Sections 17040, 17921, 17922, 19990.

Reference – Health and Safety Code Sections 17000 through 17060, 17910 through 17990, 19960 through 19997; and Government Code Section 12955.1.

3. HCD 2 – The Department of Housing and Community Development.

Application *– Permanent buildings and permanent accessory buildings or structures constructed within mobilehome parks and special occupancy parks.*

Enforcing Agency – The local building department or the Department of Housing and Community Development.

Authority Cited – Health and Safety Code Section 18300, 18620, 18640, 18865, 18873 and 18873.2.

Reference – Health and Safety Code Sections 18200 through 18700 and 18860 through 18874.

SECTION A102
SCOPE

A102.2 Essential and hazardous facilities. The provisions of this chapter shall not apply to the strengthening of buildings in Risk Category III or IV. Such buildings shall be strengthened to meet the requirements of the ~~International~~

California Building Code for new buildings of the same risk category or other such criteria approved by the code official.

SECTION A103
DEFINITIONS

For the purpose of this chapter, the applicable definitions in the ~~building code~~ *California Building Code as adopted by the California Building Standards Commission (BSC)* shall also apply:

BUILDING CODE. (HCD 1 & HCD 2) *"Building Code" shall mean the most current edition of the California Building Code, Title 24, Part 2, as adopted by the California Building Standards Commission (BSC).*

SECTION A105
GENERAL REQUIREMENTS

A105.4 Structural observation, testing and inspection. Structural observation, in accordance with Section ~~1708~~ *1704* of the ~~International~~ *California* Building Code, shall be required for all structures in which seismic retrofit is being performed in accordance with this chapter. Structural observation shall include visual observation of work for conformance with the approved construction documents and confirmation of existing conditions assumed during design.

Structural testing and inspection for new construction materials shall be in accordance with the *California B*uilding *C*ode, except as modified by this chapter.

NOTE:
Authority Cited: Health and Safety Code Sections 17040, 17050, 17920.9, 17921, 17921.3, 17921.6, 17921.10, 17922, 17922.6, 17922.12, 17927, 17928, 17959.6, 18300, 18552, 18554, 18620, 18630, 18640, 18670, 18690, 18691, 18865, 18871.3, 18871.4, 18873, 18873.1, 18873.2, 18873.3, 18873.4, 18873.5, 18938.3, 18944.11 and 19990; and Government Code Section 12955.1.

Reference: Health and Safety Code Sections 17000 through 17062.5, 17910 through 17995.5, 18200 through 18700, 18860 through 18874, and 19960 through 19997; and Government Code Sections 12955.1 and 12955.1.1.

19. HCD proposes to NOT adopt Appendix A, Chapter A2, from the 2015 International Existing Building Code.

CHAPTER A2
EARTHQUAKE HAZARD REDUCTION IN EXISTING REINFORCED CONCRETE AND REINFORCED MASONRY WALL BUILDINGS WITH FLEXIBLE DIAPHRAGMS

NOTE:
Authority Cited: Health and Safety Code Sections 17040, 17050, 17920.9, 17921, 17921.3, 17921.6, 17921.10, 17922, 17922.6, 17922.12, 17927, 17928, 17959.6, 18300, 18552, 18554, 18620, 18630, 18640, 18670, 18690, 18691, 18865, 18871.3, 18871.4, 18873, 18873.1, 18873.2, 18873.3, 18873.4, 18873.5, 18938.3, 18944.11 and 19990; and Government Code Section 12955.1.

Reference: Health and Safety Code Sections 17000 through 17062.5, 17910 through 17995.5, 18200 through 18700, 18860 through 18874, and 19960 through 19997; and Government Code Sections 12955.1 and 12955.1.1.

20. HCD proposes to adopt Appendix A, Chapter A3 (Sections A301.1 – A304.5.1, Tables A3-A and A3-B, and Figures A3-1 – A3-10) from the 2015 International Existing Building Code into the 2016 California Existing Building Code with amendments as follows:

CHAPTER A3
PRESCRIPTIVE PROVISIONS FOR SEISMIC STRENGTHENING OF CRIPPLE WALLS AND SILL PLATE ANCHORAGE OF LIGHT, WOOD-FRAME RESIDENTIAL BUILDINGS

SECTION A302
DEFINITIONS

For the purpose of this chapter, in addition to the applicable definitions in the *California* *B*uilding *C*ode, certain additional terms are defined as follows:

CODE OFFICIAL. *"Code Official" shall have the same meaning as Enforcing Agency.*

ENFORCING AGENCY. *The designated department or agency as specified by statute or regulation.*

SECTION A304
STRENGTHENING REQUIREMENTS

A304.5 ~~Quality control~~ *Inspections*. All work shall be subject to inspection by the code official including, but not limited to:

1. Placement and installation of new adhesive or expansion anchors installed in existing foundations. Special inspection ~~is not~~ *may be* required for adhesive anchors installed in existing foundations regulated by the prescriptive provisions of this chapter.
2. Installation and nailing of new cripple wall bracing.
3. Any work may be subject to special inspection when required by the code official in accordance with the building code.

A304.6 Phasing of the strengthening work. *When approved by the Enforcing Agency, the strengthening work contained in this chapter may be completed in phases.*

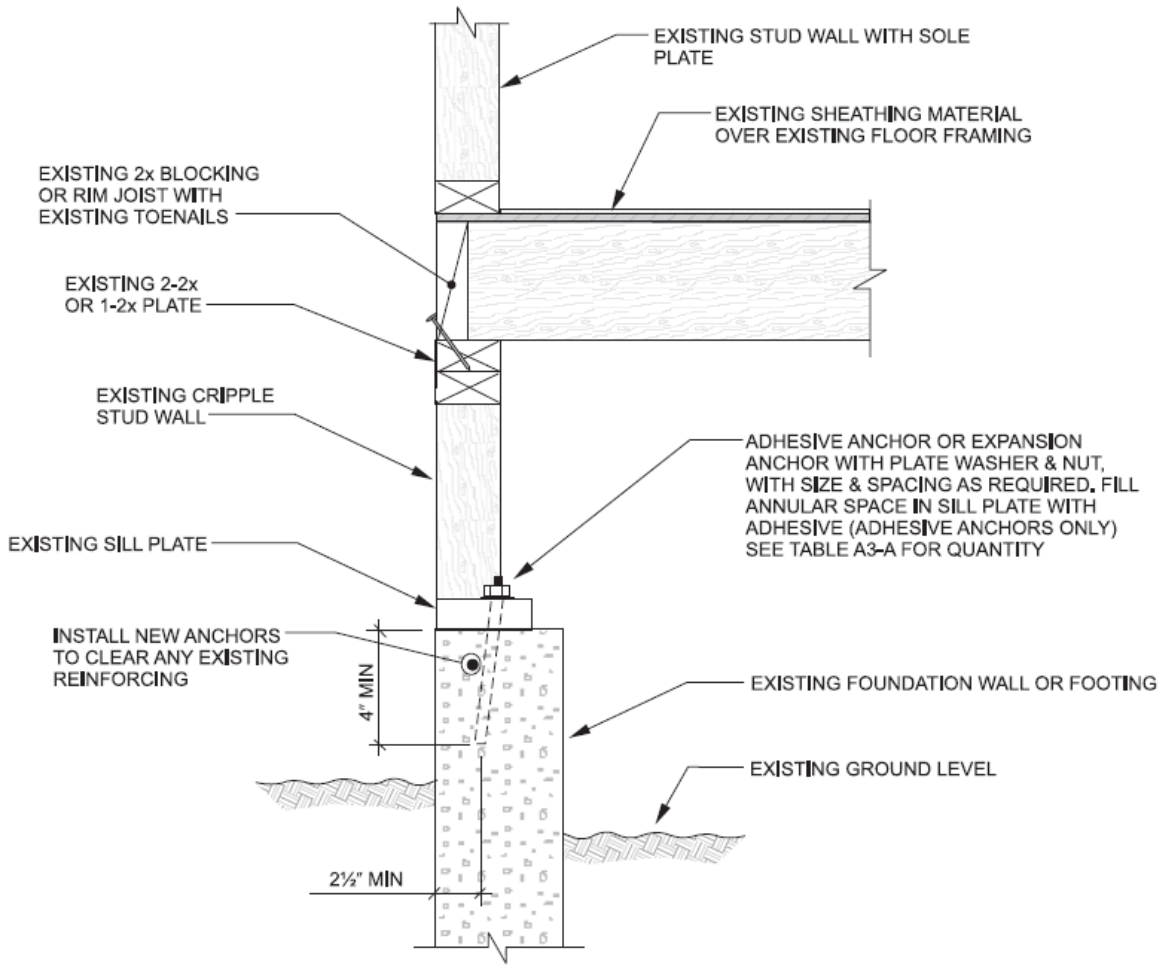

For SI: 1 inch = 25.4 mm.

NOTES:

1. Plate washers shall comply with the following:

   $^{1}/_{2}$-inch anchor or bolt—3 inches × 3 inches × 0.229 inch minimum.

   $^{5}/_{8}$-inch anchor or bolt—3 inches × 3 inches × 0.229 inch minimum.

   A diagonal slot in the plate washer is permitted in accordance with Table A3-A, Footnote b.

2. See Figure A3-5 or A3-6 for cripple wall bracing.

[BS] FIGURE A3-3

SILL PLATE ~~BOLTING~~ ANCHORING TO EXISTING FOUNDATION

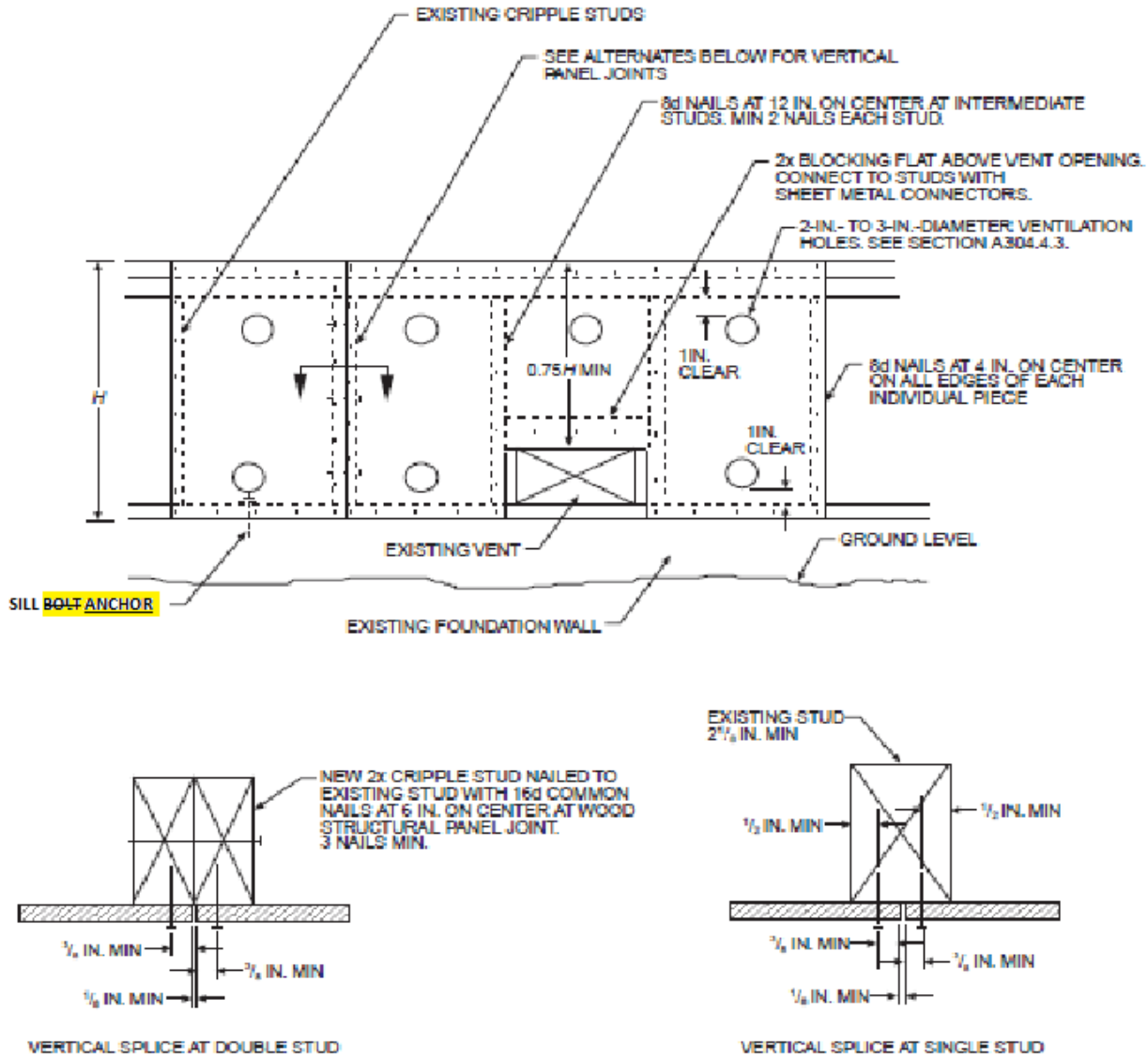

For SI: 1 inch = 25.4 mm.

[BS] FIGURE A3-7
PARTIAL CRIPPLE STUD WALL ELEVATION

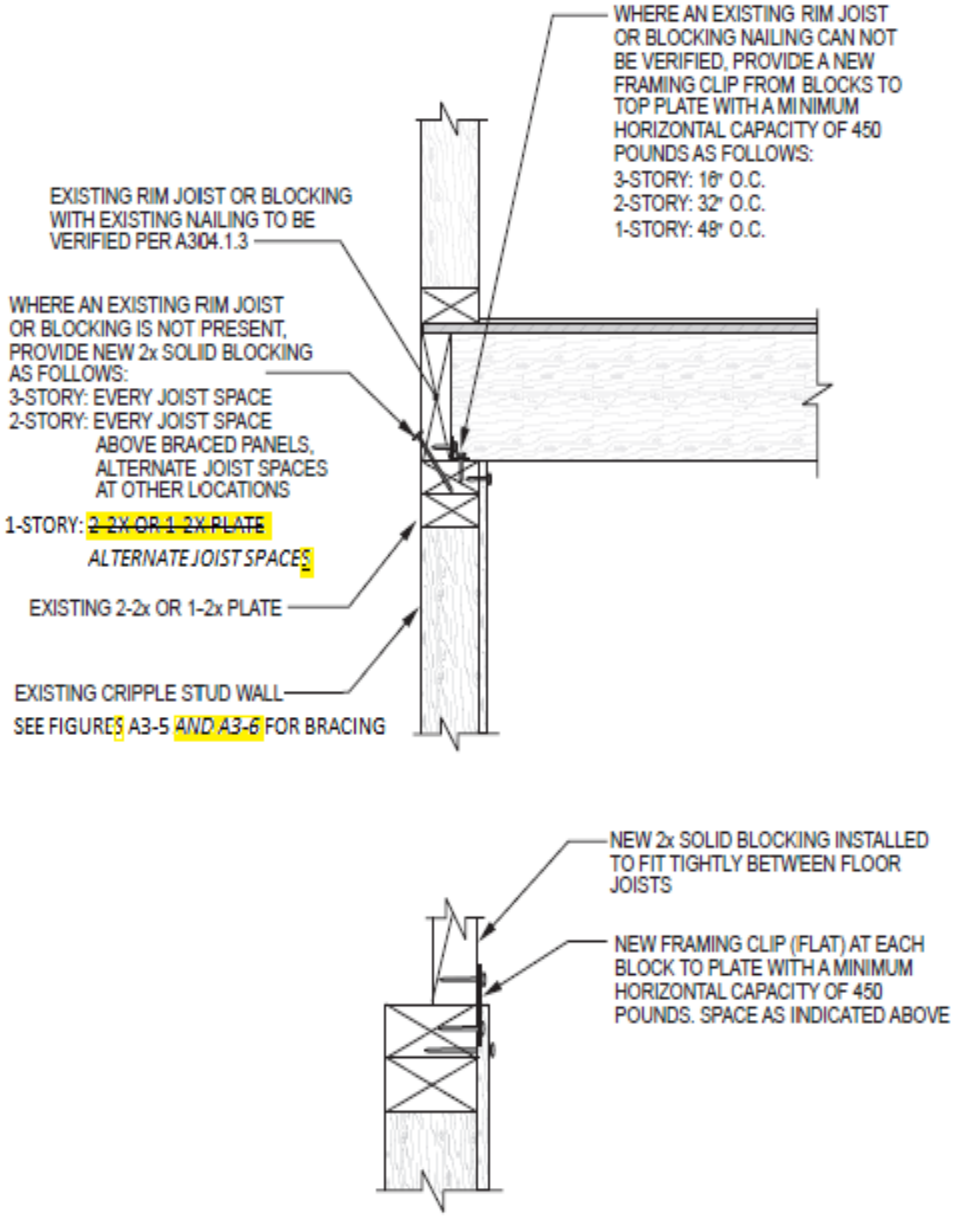

ALTERNATE DETAIL FOR FLUSH CONDITION

For SI: 1 inch = 25.4 mm, 1 pound = 4.4 N.
NOTE: See manufacturing instructions for nail sizes associated with metal framing clips.

[BS] FIGURE A3-8A
TYPICAL FLOOR TO CRIPPLE WALL CONNECTION (FLOOR JOISTS NOT PARALLEL TO FOUNDATIONS)

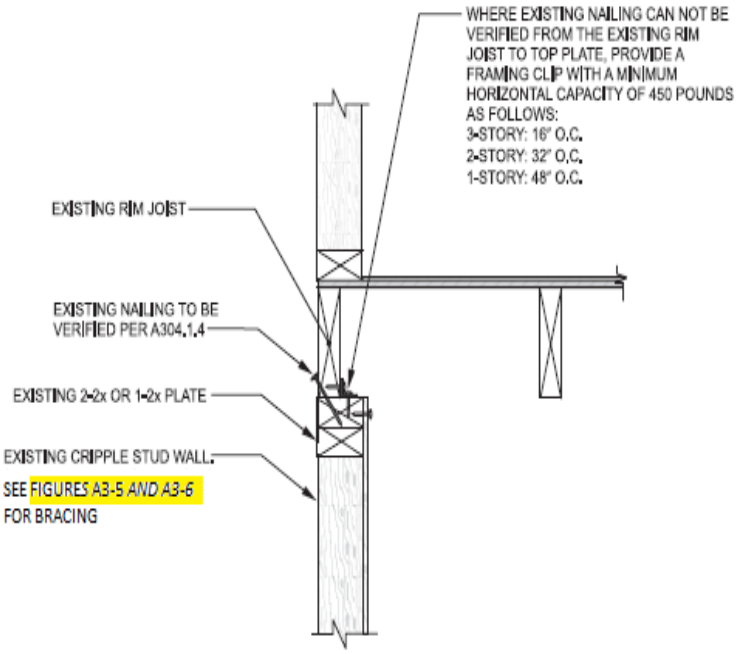

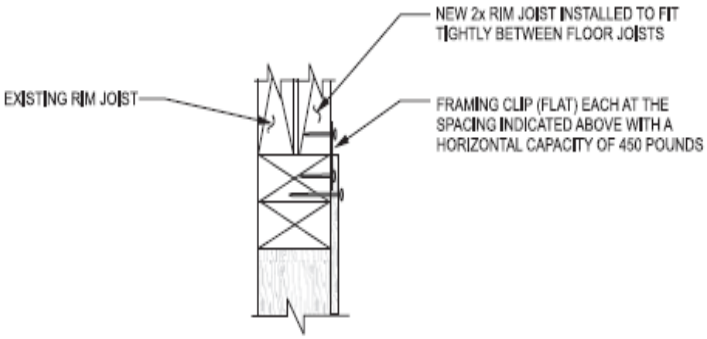

ALTERNATE CONNECTION FOR FLUSH CONNECTION

For SI: 1 inch = 25.4 mm, 1 pound = 4.4 N.

NOTE: See manufacturing instructions for nail sizes associated with metal framing clips.

[BS] FIGURE A3-8B
TYPICAL FLOOR TO CRIPPLE WALL CONNECTION (FLOOR JOISTS PARALLEL TO FOUNDATIONS)

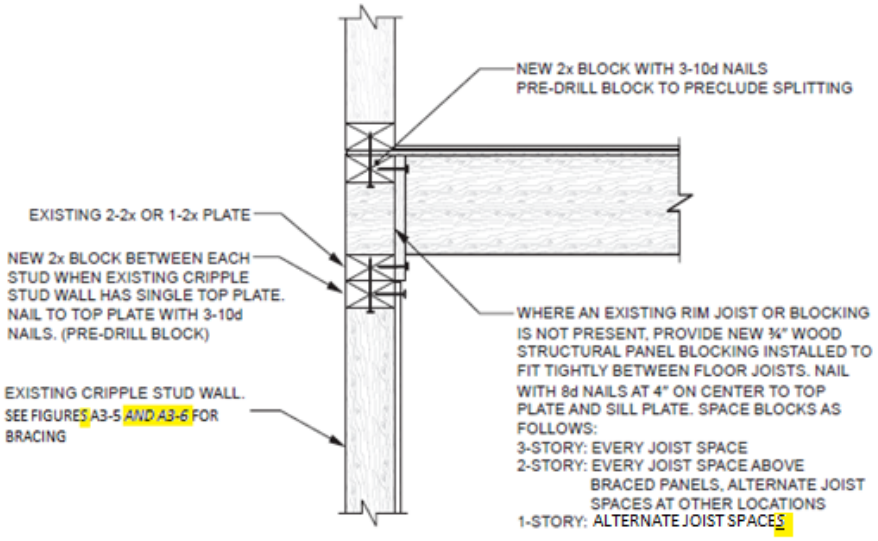

FLOOR JOISTS NOT PARALLEL TO FOUNDATION

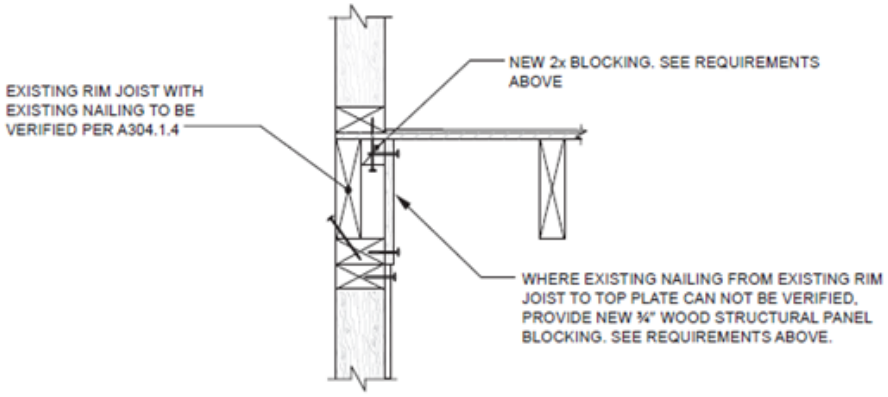

FLOOR JOISTS PARALLEL TO FOUNDATION

For SI: 1 inch = 25.4 mm, 1 pound = 4.4N.
NOTE: See Section A304.4 for cripple wall bracing.

[BS] FIGURE A3-9
ALTERNATE FLOOR FRAMING TO CRIPPLE WALL CONNECTION

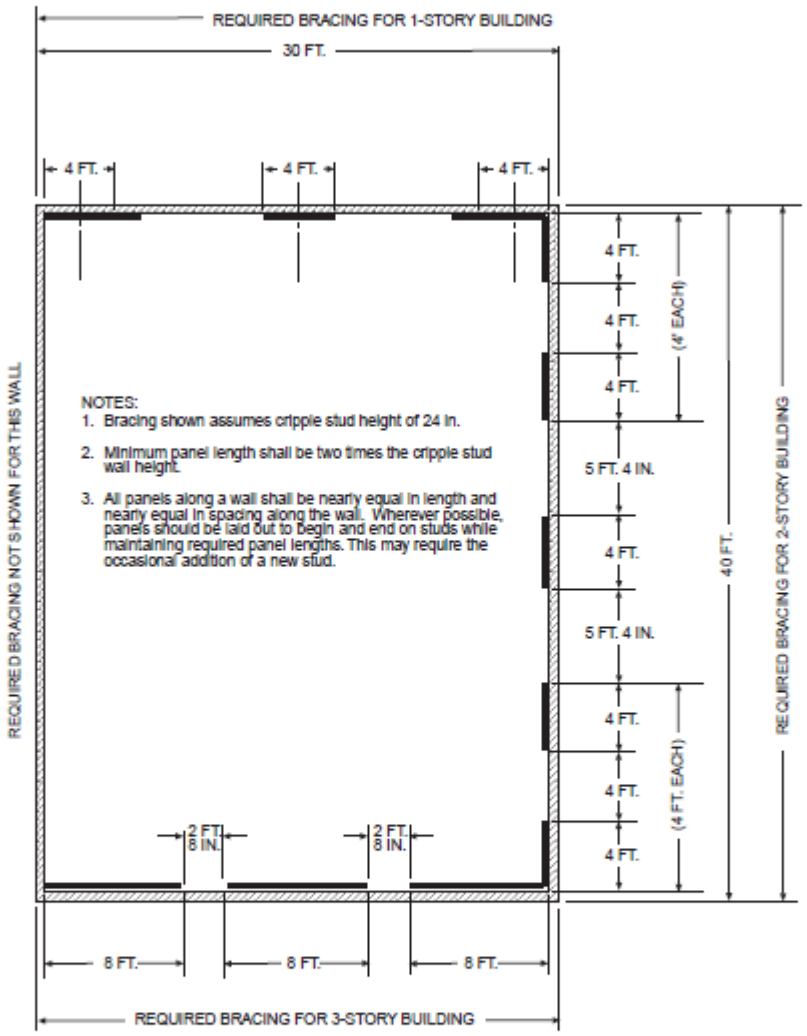

Bracing determination:

1-story building—each end and not less than 40% of wall length.[1]
Transverse wall—30 ft. x 0.40 = 12 ft. ~~minimum panel length = 4 ft. 0 in.~~
Minimum panel length = 4 ft. 0 in.

2-story building—each end and not less than 50% of wall length.[1]
Longitudinal wall—40 ft. x 0.50 = 20 ft. 0 in. minimum of bracing.

3-story building—each end and not less than 80% of wall length.[1]
Transverse wall—30 ft. x 0.80 = 24 ft. 0 in. minimum of bracing.

[1]See Table A3-A for buildings with both plaster walls and roofing exceeding 6 psf (287 N/m²)

For SI: 1 inch = 25.4 mm, 1 foot = 304.8 mm.

[BS] FIGURE A3-10—
FLOOR PLAN-CRIPPLE WALL BRACING LAYOUT

NOTE:
Authority Cited: Health and Safety Code Sections 17040, 17050, 17920.9, 17921, 17921.3, 17921.6, 17921.10, 17922, 17922.6, 17922.12, 17927, 17928, 17959.6, 18300, 18552, 18554, 18620, 18630, 18640, 18670, 18690, 18691, 18865, 18871.3, 18871.4, 18873, 18873.1, 18873.2, 18873.3, 18873.4, 18873.5, 18938.3, 18944.11 and 19990; and Government Code Section 12955.1.

Reference: Health and Safety Code Sections 17000 through 17062.5, 17910 through 17995.5, 18200 through 18700, 18860 through 18874, and 19960 through 19997; and Government Code Sections 12955.1 and 12955.1.1.

21. HCD proposes to NOT adopt Appendix A, Chapter A4, from the 2015 International Existing Building Code.

CHAPTER A4
EARTHQUAKE RISK REDUCTION IN WOOD-FRAME RESIDENTIAL BUILDINGS WITH SOFT, WEAK OR OPEN FRONT WALLS

NOTE:
Authority Cited: Health and Safety Code Sections 17040, 17050, 17920.9, 17921, 17921.3, 17921.6, 17921.10, 17922, 17922.6, 17922.12, 17927, 17928, 17959.6, 18300, 18552, 18554, 18620, 18630, 18640, 18670, 18690, 18691, 18865, 18871.3, 18871.4, 18873, 18873.1, 18873.2, 18873.3, 18873.4, 18873.5, 18938.3, 18944.11 and 19990; and Government Code Section 12955.1.

Reference: Health and Safety Code Sections 17000 through 17062.5, 17910 through 17995.5, 18200 through 18700, 18860 through 18874, and 19960 through 19997; and Government Code Sections 12955.1 and 12955.1.1.

22. HCD proposes to NOT adopt Appendix A, Chapter A5, from the 2015 International Existing Building Code.

CHAPTER A5
EARTHQUAKE HAZARD REDUCTION IN EXISTING CONCRETE BUILDINGS

NOTE:
Authority Cited: Health and Safety Code Sections 17040, 17050, 17920.9, 17921, 17921.3, 17921.6, 17921.10, 17922, 17922.6, 17922.12, 17927, 17928, 17959.6, 18300, 18552, 18554, 18620, 18630, 18640, 18670, 18690, 18691, 18865, 18871.3, 18871.4, 18873, 18873.1, 18873.2, 18873.3, 18873.4, 18873.5, 18938.3, 18944.11 and 19990; and Government Code Section 12955.1.

Reference: Health and Safety Code Sections 17000 through 17062.5, 17910 through 17995.5, 18200 through 18700, 18860 through 18874, and 19960 through 19997; and Government Code Sections 12955.1 and 12955.1.1.

23. HCD proposes to adopt Appendix A, Chapter A6, from the 2015 International Existing Building Code into the 2016 California Existing Building Code with amendments as follows:

CHAPTER A6
REFERENCED STANDARDS

ASCE/SEI	American Society of Civil Engineers Structural Engineers Institute 1801 Alexander Bell Drive Reston, VA 20191-4400	
Standard Reference Number	Title	Referenced in code section number
7-10 ~~41-13~~	Minimum Design Loads for Buildings and Other Structures with Supplement No. 1……. ~~Seismic Rehabilitation of Existing Buildings~~…….	A104, ~~A403.3~~ ~~A503.2, A504.1, A505.1, A506.3.2, A507.1~~
ASTM	ASTM International 100 Barr Harbor Drive West Conshohocken, PA 19428-2959	
Standard Reference Number	Title	Referenced in code section number
~~A36/A36M-08~~ A 653/A653M—11 B 695—04(2009) C 496—96/C496M-11 E 488-10 E 519/E519M—2010	~~Specification for Carbon Structural Steel~~. ……. Standard Specification for Steel Sheet, Zinc Coated (Galvanized) or Zinc-Iron Alloy-Coated (Galvannealed) by Hot-Dip Process ……. Standard Specification for Coating of Zinc Mechanically Deposited on Iron And Steel . …… Standard Test Method for Splitting Tensile Strength of Cylindrical Concrete Specimens……. Test Method for Strength of Anchors in Concrete and Masonry Elements…….. Standard Test Method for Diagonal Tension (Shear) in Masonry Assemblages…….	~~A405.3.3~~ A304.2.6 A304.2.6 A104, A106.3.3.2 A107.5.3 A104, A106.3.3.2
ICC	International Code Council, Inc. 500 New Jersey Avenue, NW, 6th Floor Washington, DC 20001	
Standard Reference Number	Title	Referenced in code section number
~~BNBC—93~~	~~BOCA National Building Code®~~ ……	~~A502~~
~~BNBC—96~~	~~BOCA National Building Code®~~ ……	~~A502~~
~~BNBC—99~~	~~BOCA National Building Code®~~ ……	~~A202~~
~~IBC—00~~	~~International Building Code®~~ ……	~~A202.1, A502.1~~
~~IBC—03~~	~~International Building Code®~~ ……	~~A202.1, A502.1~~
~~IBC—06~~	~~International Building Code®~~ ……	~~A202.1, A502.1~~
~~IBC—09~~	~~International Building Code®~~ ……	~~A202.1, A502.1~~
~~IBC—12~~	~~International Building Code®~~ ……	~~A202.1, A502.1~~
~~IBC—15~~	~~International Building Code®~~ ……	~~A102.2, A108.2, A202.1, A203, A206.3, A206.9, A403.1, A405.1, A407.1, A502.1, A503.3, A506.4~~
~~SBC—94~~	~~Standard Building Code®~~ ……	~~A502~~
~~SBC—97~~	~~Standard Building Code®~~ ……	~~A502~~
~~SBC—99~~	~~Standard Building Code®~~ ……	~~A202, A502~~
~~UBC—76~~	~~Uniform Building Code®~~ ……	~~A502~~
~~UBC—97~~	~~Uniform Building Code®~~ ……	~~A202, A502~~

NOTE:
Authority Cited: Health and Safety Code Sections 17040, 17050, 17920.9, 17921, 17921.3, 17921.6, 17921.10, 17922, 17922.6, 17922.12, 17927, 17928, 17959.6, 18300, 18552, 18554, 18620, 18630, 18640, 18670, 18690, 18691, 18865, 18871.3, 18871.4, 18873, 18873.1, 18873.2, 18873.3, 18873.4, 18873.5, 18938.3, 18944.11 and 19990; and Government Code Section 12955.1.

Reference: Health and Safety Code Sections 17000 through 17062.5, 17910 through 17995.5, 18200 through 18700, 18860 through 18874, and 19960 through 19997; and Government Code Sections 12955.1 and 12955.1.1.

24. HCD proposes to NOT adopt Appendix B from the 2015 International Existing Building Code.

APPENDIX B
SUPPLEMENTARY ACCESSIBILITY REQUIREMENTS FOR EXISTING BUILDINGS AND FACILITIES

NOTE:
Authority Cited: Health and Safety Code Sections 17040, 17050, 17920.9, 17921, 17921.3, 17921.6, 17921.10, 17922, 17922.6, 17922.12, 17927, 17928, 17959.6, 18300, 18552, 18554, 18620, 18630, 18640, 18670, 18690, 18691, 18865, 18871.3, 18871.4, 18873, 18873.1, 18873.2, 18873.3, 18873.4, 18873.5, 18938.3, 18944.11 and 19990; and Government Code Section 12955.1.

Reference: Health and Safety Code Sections 17000 through 17062.5, 17910 through 17995.5, 18200 through 18700, 18860 through 18874, and 19960 through 19997; and Government Code Sections 12955.1 and 12955.1.1.

25. HCD proposes to NOT adopt Appendix C from the 2015 International Existing Building Code.

APPENDIX C
GUIDELINES FOR THE WIND RETROFIT OF EXISTING BUILDINGS

NOTE:
Authority Cited: Health and Safety Code Sections 17040, 17050, 17920.9, 17921, 17921.3, 17921.6, 17921.10, 17922, 17922.6, 17922.12, 17927, 17928, 17959.6, 18300, 18552, 18554, 18620, 18630, 18640, 18670, 18690, 18691, 18865, 18871.3, 18871.4, 18873, 18873.1, 18873.2, 18873.3, 18873.4, 18873.5, 18938.3, 18944.11 and 19990; and Government Code Section 12955.1.

Reference: Health and Safety Code Sections 17000 through 17062.5, 17910 through 17995.5, 18200 through 18700, 18860 through 18874, and 19960 through 19997; and Government Code Sections 12955.1 and 12955.1.1.

26. HCD proposes to NOT adopt Resource A, from the 2015 International Existing Building Code.

RESOURCE A
GUIDELINES ON FIRE RATINGS OF ARCHAIC MATERIALS AND ASSEMBLIES

NOTE:
Authority Cited: Health and Safety Code Sections 17040, 17050, 17920.9, 17921, 17921.3, 17921.6, 17921.10, 17922, 17922.6, 17922.12, 17927, 17928, 17959.6, 18300, 18552, 18554, 18620, 18630, 18640, 18670, 18690, 18691, 18865, 18871.3, 18871.4, 18873, 18873.1, 18873.2, 18873.3, 18873.4, 18873.5, 18938.3, 18944.11 and 19990; and Government Code Section 12955.1.

Reference: Health and Safety Code Sections 17000 through 17062.5, 17910 through 17995.5, 18200 through 18700, 18860 through 18874, and 19960 through 19997; and Government Code Sections 12955.1 and 12955.1.1.