MOBILEHOME PARK AWNING ENCLOSURES

Definitions

Awning An accessory structure, used for shade or weather protection, supported by one or more posts or columns and partially supported by a unit or other accessory structure installed, erected, or used on a lot.

Awning Enclosure An enclosure designed for outdoor recreational purposes, not for habilitation, constructed under an awning or freestanding awning, which may include a screen room, and either an accessory building or structure, or a building component.

Awning, Freestanding An accessory structure, used for shade or weather protection, supported entirely by columns or posts and, other than flashing, not attached to or supported by a unit or other accessory structure.

§ 1422. Application and Scope.

(a) Except as otherwise noted, the requirements of this article shall apply to the construction, use, maintenance, and occupancy of accessory buildings or structures and building components constructed or installed adjacent to units both within and outside of parks.

(b) Accessory buildings or structures or building components that are constructed and maintained in accordance with those statutes and regulations which were in effect on the date of original construction, are not subject to the requirements of subsequent regulations. An accessory building or structure or building component that is moved to a different location shall be subject to the permit to construct requirements of this chapter. Any alterations or additions must comply with the current provisions of this chapter.

(c) No accessory structure may be attached to or be supported by an MH-unit if the manufacturer's installation instructions prohibit attachment or transmission of loads to the unit or require freestanding structures. (d) When the manufacturer's installation instructions are not available, accessory structures with a roof live load greater than ten (10) psf shall be freestanding. An existing awning or carport, exceeding ten (10) psf that was previously supported by the unit, may be reinstalled at the time of MH-unit installation.

NOTE: Authority cited: Section 18300, Health and Safety Code. Reference: Sections 18254 and 18552, Health and Safety Code.

§ 1424. Regulated Structures.

(a) Accessory buildings or structures or building components which do not comply with this article or are deemed to be unsafe by the enforcement agency shall not be allowed, constructed, or occupied.

(b) A permit shall be obtained from the enforcement agency to construct or install an accessory building or structure as required by Article 1 of this chapter, unless specifically exempted in section 1018 of this chapter.

NOTE: Authority cited: Section 18300, Health and Safety Code. Reference: Sections 18500, and 18552, Health and Safety Code.

§ 1426. Accessory Buildings or Structures and Building Components Installed in Fire Hazard Severity Zones.

(a) Accessory buildings or structures or building components constructed or installed in parks in a State Responsibility Area Fire Hazard Severity Zone or a local Very-High Fire Hazard Severity Zone, as indicated on the California Department of Forestry and Fire Protection's Fire Hazard Severity Zone Maps, shall comply with Title 24, Part 2.5, Chapter 3, section R327 of the California Residential Code (CRC) which is hereby incorporated by reference with the exception of the following provisions: Sections R327.1.5, R327.2 (Fire Protection Plan) and R327.3.6.

(b) Accessory buildings or structures or building components constructed or installed outside of parks in a State Responsibility Area Fire Hazard Severity Zone, a local Very-High Fire Hazard Severity Zone, or a local Wildland-Urban Interface Fire Area shall comply with the provisions of the CRC, Title 24, Part 2.5, Chapter 3, section R327.

NOTE: Authority cited: Sections 18300 and 18691, Health and Safety Code. Reference: Section 18691.

§ 1428. Location.

(a) In parks, accessory buildings or structures, or any part thereof, on a lot shall maintain the following setbacks from lot lines:

(1) When constructed of noncombustible materials:

(A) may be up to the lot line, provided a minimum three (3) foot clearance is maintained from any other unit, accessory building or structure, or building component on adjacent lots.

(2) When constructed of combustible materials:

(A) a minimum three (3)-foot clearance from all lot lines, and

(B) a minimum six (6)-foot clearance from any other unit, accessory buildings or structures, or building components on adjacent lots constructed of combustible materials.

(b) Cabanas shall meet the location requirements for units, as referenced in section 1330 of this chapter.

(c) Location requirements governing private garages and storage buildings are contained in section 1443.

(d) Stairways with landings not to exceed twelve (12) square feet may be installed to the lot line provided they are located a minimum of three (3) feet from any unit, or accessory building or structure, including another stairway, on an adjacent lot. However, if the stairway is an up-and-over design (steps up the front and down the back) that provides access to the lot beyond the stairway, it does not need to maintain the separation from a unit or accessory building or structure, including another stairway, on an adjacent lot.

(e) Fencing of any material, that meets the requirements of section 1514 of this article, may be installed up to a lot line.

(f) No portion of an accessory building or structure, or building component shall project over or beyond a lot line.

(g) Any accessory building or structure, or building component may be installed up to a lot line bordering a roadway or common area provided there is no combustible building or structure in the common area within six (6) feet and no building or structure of any kind within three (3) feet of any portion of the accessory building or structure, or building component. The maximum seventy-five percent (75%) lot coverage allowed by section 1110 of this chapter shall be maintained.

(h) Wood awning or carport support posts four (4) inches or greater in nominal thickness may be located up to a lot line provided the remainder of the awning or carport is composed of noncombustible material.

NOTE: Authority cited: Sections 18300, and 18610, Health and Safety Code. Reference: Sections 18552 and 18610, Health and Safety Code.

§ 1429. Required Exits.

(a) An enclosed accessory building or structure or building component may be constructed or installed to enclose an emergency exit window from a sleeping room within a unit provided the enclosed area adjacent to the emergency exit window has a door not less than twenty-eight (28) inches in width and seventy-four (74) inches in height providing direct access to the outside. The exit doorway from the enclosed accessory building or structure, or building component shall comply with the exit illumination requirements contained in the California Residential Code and lighting outlet requirements contained in the California Electrical code.

(b) An accessory building or structure which encloses a required exit doorway from an MH-unit shall have an exit path and exit that does not violate the exit facilities requirements for manufactured homes, as contained in the Manufactured Home Construction and Safety Standards, 24CFR, Part 3280.105.

(c) An awning enclosure that encloses a required exit shall not be divided with interior walls or barriers unless the divided areas contain additional exit doors serving the divided areas that comply with subsection (a).

NOTE: Authority cited: Sections 18029 and 18300, Health and Safety Code. Reference: Sections 18029, 18552, and 18610, Health and Safety Code.

§ 1432. Construction.

(a) Construction and installation of accessory buildings or structures or building components shall comply with the structural requirements of the California Residential Code, except as otherwise provided by this article. The enforcement agency may require accessory buildings and structures or building components be designed and constructed to withstand live loads, vertical uplift or horizontal forces from any direction in excess of the minimum loads specified in this chapter, based on local geologic, topographic, or climatic conditions, when approved by the department.

(b) Accessory buildings and structures constructed of aluminum or aluminum alloy shall be designed to conform to the specifications contained in the California Residential Code.

(c) Unless data to substantiate the use of higher values is submitted to the enforcement agency, the allowable loading of accessory buildings or structures or building components on the soil shall not exceed one thousand five-hundred (1,500) psf vertical soil bearing pressure, one hundred fifty (150) psf of depth lateral soil bearing pressure, and one hundred sixty-seven (167) psf frictional resistance for uncased cast-in-place concrete piles.

NOTE: Authority cited: Section 18300, Health as Safety Code. Reference: Sections 18552 and 18620, Health and Safety Code.

§ 1433. Roof Live Load.

(a) Except as provided in section 1443.1 of this article, every cabana installed on or after July 31, 1976, or every accessory building or structure or building component installed on or after June 10, 1979, shall have the capacity to resist the applicable minimum snow load of the region in which it is installed or as is provided by this section. Note: An accessory structure located beneath another accessory structure (e.g., a porch which is located beneath an awning) is excluded from the snow load requirements of this section when the overlying accessory structure meets the requirements of this section.

TABLE 1433-1
General Roof Live Load Requirements for
Accessory Buildings or Structures and Building Components

Region I		Region II		Region III	
Elevation	Roof Live Load	Elevation	Roof Live Load	Elevation	Roof Live Load
All Elevations	20 psf	0-3000 ft.	20 psf	0-2000 ft.	20 psf
		3001-3500 ft.	30 psf	2001-3000 ft.	30 psf
		3501-4000 ft.	60 psf	3001-4000 ft.	60 psf

Table 1433-1 shall apply except where either greater or lesser snow loads have been established through survey of the region, and approved by the department.

(1) Region I includes the following counties:

Alameda, Butte, Colusa, Contra Costa, Del Norte, Glenn, Humboldt, Imperial, Kings, Lake, Los Angeles, Marin, Mendocino, Merced, Monterey, Napa, Orange, Sacramento, San Benito, San Diego, San Francisco, San Joaquin, San Luis Obispo, San Mateo, Santa Barbara, Santa Clara, Santa Cruz, Solano, Sonoma, Stanislaus, Sutter, Ventura, Yolo.

(2) Region II includes the following counties:

Amador, Fresno, Inyo, Kern, Modoc, Riverside, San Bernardino, Siskiyou.

(3) Region III includes the following counties:

Alpine, Calaveras, El Dorado, Lassen, Madera, Mariposa, Mono, Nevada, Placer, Plumas, Shasta, Sierra, Tehama, Trinity, Tulare, Tuolumne, Yuba.

(b) Parks that have received approval for a snow roof load maintenance program prior to July 7, 2004, shall maintain the snow roof load maintenance program, as long as accessory buildings or structures, or building components in the park do not meet the minimum roof loads for the area. Accessory buildings or structures or building components installed after July 7, 2004, must have the capacity to resist the applicable minimum roof live loads of the region in which it is installed, as set forth in Table 1433-1.

(c) The park owner or operator shall be responsible for the continued management of an existing snow roof load maintenance program approved for the park.

(d) Roof live load requirements shall not apply to storage cabinets.

(e) Accessory buildings or structures or building components may be relocated from one park to another and reinstalled under permit within another park provided the requirements for roof live load in the new park are not greater than the requirements of the park in which the accessory building or structure or building component was previously installed.

NOTE: Authority cited: Sections 18300, and 18610, Health and Safety Code. Reference: Section 18552, Health and Safety Code.

§ 1433.1. Accessory Building or Structure Roof Live Loads in Parks Located Above 4,000 feet in Elevation

(a) Notwithstanding the provisions of Section 1433, if an accessory building or structure that is proposed to be installed within a mobilehome park located above 4,000 feet in elevation does not have the capacity to resist the minimum snow loads as established for residential buildings by local ordinance, the accessory building or structure may only be installed in a mobilehome park if all of the following conditions apply:

(1) The park has and is operating a snow roof load maintenance program approved by the enforcement agency;

(2) the accessory building or structure has the capacity to resist a roof live load of sixty (60) pounds per square foot (psf)or greater;

(3) the installation complies with all other applicable requirements of this chapter;

(4) the installation is approved by the enforcement agency; and

(5) the enforcement agency's approval of the snow roof load maintenance program is shown on the mobilehome park's permit to operate.

Note: An accessory structure located beneath another accessory structure (e.g., a porch which is located beneath an awning) is excluded from the snow load requirements of this section when the overlying accessory structure meets the requirements of this section.

(b) The operator of a mobilehome park located above 4,000 feet in elevation may request and obtain approval from the enforcement agency for a snow roof load maintenance program. The request for an approval shall include, but not be limited to, the following information:

(1) The type of maintenance to be used to control snow accumulation;

(2) the capacity and capability of personnel and equipment proposed to satisfactorily perform the snow roof load maintenance program; and

(3) an application for an amended permit to operate in accordance with section 1014 of this chapter.

NOTE: Authority cited: Sections 18300, and 18610, Health and Safety Code. Reference: Section 18552, Health and Safety Code.

§ 1434. Calculations and Test Procedures.

(a) The load bearing capacity of elements or assemblies shall be established by calculations in accordance with generally established principles of engineering design. However, when the composition or configuration of elements, assemblies or details of structural members are such that calculations of their safe load-carrying capacity and basic structural integrity cannot be accurately determined in accordance with generally established principles of engineering design, structural properties of such elements or assemblies may be established by the results of tests that are designed and certified by an architect or engineer, with the test results approved by the department.

(b) When any structural design or method of construction is substantiated by calculations and supporting data, the calculations and supporting data shall be approved by an architect or engineer and shall be submitted to the department.

(c) When the design of accessory structures is substantiated by calculations or tests, all structural plans shall be approved by the architect or engineer in charge of the total design.

(d) When any design or method of construction is substantiated by tests, all of these tests shall be performed by an approved testing agency acceptable to the department or shall be directed, witnessed, and evaluated by an independent architect or engineer. All test procedures and results shall be reviewed, evaluated, and signed by an architect or engineer. The approved testing agency, architect, or engineer shall submit the evaluation of test results, calculations, and recommendations, to the department. The department may require that a representative of the department witness the test.

NOTE: Authority cited: Section 18300, Health and Safety Code. Reference: Section 18552, Health and Safety Code.

§ 1436. Electrical Installations.

(a) Electrical equipment and installations within an accessory building or structure or building component and the circuit supplying power shall be installed by a permanent wiring method and shall comply with the requirements for electrical installations of this chapter.

(b) Flexible cord shall not be used to supply an accessory building or structure or building component, or as a substitute for the fixed wiring of an accessory building or structure or building component.

(c) Unless otherwise specified by this article, electrical service provided to an accessory building or structure or building component may be supplied by either of the following:

(1) from the lot service equipment, provided:

(A) a permit is obtained to alter the lot electrical service by installing a separate overcurrent protective device rated not more than the total calculated electrical load, and

(B) the lot service equipment is capable of supplying the additional load, and

(C) the overcurrent protective device and its installation complies with the California Electrical Code.

(2) from an MH-unit provided:

(A) the MH-unit is capable of supplying the additional load, and

(B) a permit to alter the MH-unit's electrical system, substantiated with load calculations, is obtained from the department pursuant to the California Code of Regulations, Title 25, Division 1, Chapter 3.

NOTE: Authority cited: Section 18300, Health and Safety Code. Reference: Sections 18029, 18552, 18670, Health and Safety Code.

§ 1442. Foam Building System Flammability Standards.

The requirements of Title 25, California Code of Regulations Chapter 1, Subchapter 1, Article 4, section 24, shall apply to the use of any foam plastic or foam plastic building system used in the construction of accessory buildings or structures.

NOTE: Authority cited: Section 18300, Health and Safety Code. Reference: Sections 18552 and 18691, Health and Safety Code.

§ 1474. Awning-Enclosures.

(a) Awning enclosures shall be used only for recreational or outdoor living purposes and shall not be used as carports or storage rooms nor shall they be constructed or converted for use as a habitable room or a cabana.

(b)Combustible material used for awning enclosures shall not be installed within three (3) feet of the lot line pursuant to section 1428 of this chapter.

(c) Awnings may be enclosed or partially enclosed as follows:

(1) With insect screening or removable flexible plastic material. Awning drop or side curtains shall not be permanently fastened at the sides or bottom. (A permit to construct is not required.)

(2) With rigid, readily removable transparent, or translucent materials.

(3) Awnings may be partially enclosed with solid, opaque panels, provided the panels do not exceed fifty (50) percent of the total wall area.

(4) Awnings may be completely enclosed with solid material, provided that fifty (50) percent of the total wall area is translucent or transparent material, of which twenty-five (25) percent of the total wall area shall be able to be opened for ventilation. Exiting requirements shall meet the requirements for a cabana.

(d) Where an awning is erected or constructed immediately adjacent to or over a permanently constructed retaining wall of fire resistant material, there shall be not less than eighteen (18) inches clear ventilating opening between the underside of the awning roof and the top of the wall extending the full length of the awning.

(e) An awning shall not be enclosed unless the enclosure is designed and constructed as a freestanding structure or unless the awning is designed and constructed to withstand the additional forces imposed by the enclosure.

(f) The construction requirements for awning enclosures are contained in the California Residential Code.

(g) Heating, cooking, or fuel burning appliances or equipment shall not be installed or used within an awning enclosure.

(h) Drop ceilings may be supported by the MH-unit provided the combined weight of the ceiling and the awning complies with section 1468(d).

(i) When an exit from the unit is enclosed, the exit from the enclosure shall satisfy the exit and lighting requirements contained in section 1429 of this chapter.

NOTE: Authority Cited: Section 18300, Health and Safety Code. Reference: Sections 18552 and 18610, Health and Safety Code.

Any noise standards shall be consistent with local noise ordinances implementing the noise element of the general plan and shall take into consideration the noise levels generated by children.

The local government shall process any required permit as economically as possible, and fees charged for review shall not exceed the costs of the review and permit process. Not less than 10 days prior to the date on which the decision will be made on the application, the zoning administrator or person designated to handle such use permits shall give notice of the proposed use by mail or delivery to all owners shown on the last equalized assessment roll as owning real property within a 100 foot radius of the exterior boundaries of the proposed large family day care home. No hearing on the application for a permit issued pursuant to this paragraph shall be held before a decision is made unless a hearing is requested by the applicant or other affected person. The applicant or other affected person may appeal the decision. The appellant shall pay the cost, if any of the appeal.

(b) A large family day-care home shall not be subject to the provisions of Division 13 (commencing with Section 21000) of the Public Resources Code.

(c) Use of a single-family dwelling for the purposes of a large family day-care home shall not constitute a change of occupancy for purposes of Part 1.5 (commencing with Section 17910) of Division 13 (State Housing Law), or for purposes of local building and fire codes.

(d) Large family day-care homes shall be considered as single-family residences for the purposes of the State Uniform Building Standards Code and local building and fire codes, except with respect to any additional standards specifically designed to promote the fire and life safety of the children in these homes adopted by the State Fire Marshal pursuant to this subdivision.

R326.3 Smoke alarms. *Large family day-care homes shall be equipped with State Fire Marshal approved and listed single station residential type smoke alarms. The number and placement of smoke alarms shall be determined by the enforcement authority.*

R326.4 Fire extinguishers. *Large and small family day-care homes shall be equipped with a portable fire extinguisher having a minimum 2A10BC rating.*

R326.5 Fire alarm devices. *Every large family day-care home shall be provided with at least one manual device at a location approved by the authority having jurisdiction. Such device shall actuate a fire alarm signal, which shall be audible throughout the facility at a minimum level of 15 db above ambient noise level. These devices need not be interconnected to any other fire alarm device, have a control panel or be electrically supervised or provided with emergency power. Such device or devices shall be attached to the structure and may be of any type acceptable to the enforcing agent, provided that such devices are distinctive in tone and are audible throughout the structure.*

R326.6 Compliance. *Every large-family day-care home shall comply with the provisions for Group R-3 occupancies and, if appropriate, Section 326.1. For the purposes of Section 326.1, the first story shall be designated as the floor used for residential occupancy nearest to the street level which provides primary access to the building.*

Enforcement of the provisions shall be in accordance with the Health and Safety Code Sections 13145 and 13146. No city, county, city and county, or district shall adopt or enforce any building ordinance or local rule or regulation relating to the subject of fire and life safety in large-family day-care homes which is inconsistent with those standards adopted by the State Fire Marshal, except to the extent the building ordinance or local rule or regulation applies to single-family residences in which day care is not provided.

R326.7 Special hazards. *Every unenclosed gas-fired water heater or furnace which is within the area used for child care in a large family day-care home shall be protected in such a way as to prevent children from making contact with those appliances.*

Exception: *This does not apply to kitchen stoves or ovens.*

R326.8 Exiting. *Every story or basement of a large family day-care home shall be provided with two exits which are remotely located from each other. Every required exit shall be of a size to permit the installation of a door not less than 32 inches (813mm) in clear width and not less than 6 feet 8 inches (2032 mm) in height. A manually operated horizontal sliding door may be used as one of the two required exits.*

Where basements are used for day-care purposes, one of the two required exits shall provide access directly to the exterior without entering the first story. The second exit from the basement may either pass through the story above or exit directly to the exterior.

Rooms used for day-care purposes shall not be located above the first story.

Exception: *Buildings equipped with an automatic sprinkler system throughout and which have at least one of the required exits providing access directly to the exterior. NFPA 13R may be used in large family day-care homes. The sprinkler omissions of NFPA 13R shall not apply unless approved by the enforcing agency.*

Exit doors, including manually operated horizontal sliding doors, shall be openable from the inside without use of a key or any special knowledge or effort.

SECTION R327
MATERIALS AND CONSTRUCTION METHODS FOR EXTERIOR WILDFIRE EXPOSURE

SECTION R327.1
SCOPE, PURPOSE AND APPLICATION

R327.1.1 Scope. *This chapter applies to building materials, systems and or assemblies used in the exterior design and construction of new buildings located within a Wildland-Urban Interface Fire Area as defined in Section R327.2.*

R327.1.2 Purpose. *The purpose of this Chapter is to establish minimum standards for the protection of life and prop-*

erty by increasing the ability of a building located in any Fire Hazard Severity Zone within State Responsibility Areas or any Wildland-Urban Interface Fire Area to resist the intrusion of flame or burning embers projected by a vegetation fire and contributes to a systematic reduction in conflagration losses.

R327.1.3. Application. *New buildings located in any Fire Hazard Severity Zone or any Wildland-Urban Interface Fire Area designated by the enforcing agency constructed after the application date shall comply with the provisions of this chapter.*

Exceptions:

1. *Buildings of an accessory character classified as a Group U occupancy and not exceeding 120 square feet in floor area, when located at least 30 feet from an applicable building.*
2. *Buildings of an accessory character classified as Group U occupancy of any size located least 50 feet from an applicable building.*
3. *Buildings classified as a Group U Agricultural Building, as defined in Section 202 of this code (see also Appendix C – Group U Agricultural Buildings), when located at least 50 feet from an applicable building.*
4. *Additions to and remodels of buildings originally constructed prior to the applicable application date.*

R327.1.3.1 Application date and where required. *New buildings for which an application for a building permit is submitted on or after July 1, 2008 located in any Fire Hazard Severity Zone or Wildland Interface Fire Area shall comply with all sections of this chapter, including all of the following areas:*

1. *All unincorporated lands designated by the State Board of Forestry and Fire Protection as State Responsibility Area (SRA) including:*
   - *1.1. Moderate Fire Hazard Severity Zones*
   - *1.2. High Fire Hazard Severity Zones*
   - *1.3. Very-High Fire Hazard Severity Zones*
2. *Land designated as Very-High Fire Hazard Severity Zone by cities and other local agencies.*
3. *Land designated as Wildland Interface Fire Area by cities and other local agencies.*

   Exceptions:

   1. *New buildings located in any Fire Hazard Severity Zone within State Responsibility Areas, for which an application for a building permit is submitted on or after January 1, 2008, shall comply with all sections of this chapter.*
   2. *New buildings located in any Fire Hazard Severity Zone within State Responsibility Areas or any Wildland Interface Fire Area designated by cities and other local agencies for which an application for a building permit is submitted on or after December 1, 2005 but prior to July 1, 2008 shall only comply with the following sections of this chapter:*
      - *2.1. Section R327.5 – Roofing*
      - *2.2. Section R327.6 – Vents*

R327.1.4 Inspection and certification. *Building permit applications and final completion approvals for buildings within the scope and application of this chapter shall comply with the following:*

1. *Building permit issuance. The local building official shall, prior to construction, provide the owner or applicant a certification that the building as proposed to be built complies with all applicable state and local building standards, including those for materials and construction methods for wildfire exposure as described in this chapter. Issuance of a building permit by the local building official for the proposed building shall be considered as complying with this section.*
2. *Building permit final. The local building official shall, upon completion of construction, provide the owner or applicant with a copy of the final inspection report that demonstrates the building was constructed in compliance with all applicable state and local building standards, including those for materials and construction methods for wildfire exposure as described in this Chapter. Issuance of a certificate of occupancy by the local building official for the proposed building shall be considered as complying with this section.*

R327.1.5 Vegetation management compliance. *Prior to building permit final approval, the property shall be in compliance with the vegetation management requirements prescribed in California Fire Code section 4906, including California Public Resources Code 4291 or California Government Code Section 51182. Acceptable methods of compliance inspection and documentation shall be determined by the enforcing agency and may include any of the following:*

1. *Local, state or federal fire authority or designee authorized to enforce vegetation management requirements*
2. *Enforcing agency*
3. *Third-party inspection and certification authorized to enforce vegetation management requirements*
4. *Property owner certification authorized by the enforcing agency*

SECTION R327.2
DEFINITIONS

For the purposes of this chapter, certain terms are defined below:

***CDF DIRECTOR** means the Director of the California Department of Forestry and Fire Protection.*

***EXTERIOR COVERING.** The exposed siding or cladding material applied to the exterior side of an exterior wall, roof eave soffit, floor projection or exposed underfloor framing.*

***FIRE PROTECTION PLAN** is a document prepared for a specific project or development proposed for a Wildland-Urban Interface Fire Area. It describes ways to minimize and mitigate potential for loss from wildfire exposure. The Fire Protection Plan shall be in accordance with this chapter and the California Fire Code, Chapter 49. When required by the enforcing agency for the purposes of granting modifications, a fire protection plan shall be submitted. Only locally adopted ordinances that have been filed with the California Building Standards Commission or the Department of Housing and Community Development in accordance with Section 1.1.8 shall apply.*

***FIRE HAZARD SEVERITY ZONES** are geographical areas designated pursuant to California Public Resources Codes Sections 4201 through 4204 and classified as Very-High, High or Moderate in State Responsibility Areas or as Local Agency Very-High Fire Hazard Severity Zones designated pursuant to California Government Code Sections 51175 through 51189. See California Fire Code Article 86.*

The California Code of Regulations, Title 14, Section 1280 entitles the maps of these geographical areas as "Maps of the Fire Hazard Severity Zones in the State Responsibility Area of California."

***HEAVY TIMBER.** A type of construction classification specified in Section 602 of the California Building Code. For use in this chapter, heavy timber shall be sawn lumber or glue laminated wood with the smallest minimum nominal dimension of 4 inches (102 mm). Heavy timber walls or floors shall be sawn or glue-laminated planks splined, tongue-and-grove, or set close together and well spiked.*

***IGNITION-RESISTANT MATERIAL** A type of building material that resists ignition or sustained flaming combustion sufficiently so as to reduce losses from wildland-urban interface conflagrations under worst-case weather and fuel conditions with wildfire exposure of burning embers and small flames, as prescribed in Section R327.3 and SFM Standard 12-7A-5, Ignition-Resistant Material.*

***LOCAL AGENCY VERY-HIGH FIRE HAZARD SEVERITY ZONE** means an area designated by a local agency upon the recommendation of the CDF Director pursuant to Government Code Sections 51177(c), 51178 and 5118 that is not a state responsibility area and where a local agency, city, county, city and county, or district is responsible for fire protection.*

***LOG WALL CONSTRUCTION.** A type of construction in which exterior walls are constructed of solid wood members and where the smallest horizontal dimension of each solid wood member is at least 6 inches (152 mm).*

***RAFTER TAIL.** The portion of roof rafter framing in a sloping roof assembly that projects beyond and overhangs an exterior wall.*

***ROOF EAVE.** The lower portion of a sloping roof assembly that projects beyond and overhangs an exterior wall at the lower end of the rafter tails. Roof eaves may be either "open" or "enclosed." Open roof eaves have exposed rafter tails and an unenclosed space on the underside of the roof deck. Enclosed roof eaves have a boxed-in roof eave soffit with a horizontal underside or sloping rafter tails with an exterior covering applied to the underside of the rafter tails.*

***ROOF EAVE SOFFIT.** An enclosed boxed-in soffit under a roof eave with exterior covering material applied to the soffit framing creating a horizontal surface on the exposed underside.*

***STATE RESPONSIBILITY AREA** means lands that are classified by the Board of Forestry pursuant to Public Resources Code Section 4125 where the financial responsibility of preventing and suppressing forest fires is primarily the responsibility of the state.*

***WILDFIRE** is any uncontrolled fire spreading through vegetative fuels that threatens to destroy life, property or resources as defined in Public Resources Code Sections 4103 and 4104.*

***WILDFIRE EXPOSURE** is one or a combination of radiant heat, convective heat, direct flame contact and burning embers being projected by vegetation fire to a structure and its immediate environment.*

***WILDLAND-URBAN INTERFACE FIRE AREA** is a geographical area identified by the state as a "Fire Hazard Severity Zone" in accordance with the Public Resources Code Sections 4201 through 4204 and Government Code Sections 51175 through 51189, or other areas designated by the enforcing agency to be at a significant risk from wildfires.*

SECTION R327.3
STANDARDS OF QUALITY

***R327.3.1 General.** Building material, systems, assemblies and methods of construction used in this chapter shall be in accordance with Section R327.3.*

***R327.3.2 Qualification by testing.** Material and material assemblies tested in accordance with the requirements of Section R327.3 shall be accepted for use when the results and conditions of those tests are met. Product evaluation testing of material and material assemblies shall be approved or listed by the State Fire Marshal, or identified in a current report issued by an approved agency.*

***R327.3.3 Approved agency.** Product evaluation testing shall be performed by an approved agency as defined in Section 1702 of the California Building Code. The scope of accreditation for the approved agency shall include building product compliance with code.*

***R327.3.4 Labeling.** Material and material assemblies tested in accordance with the requirements of section R327.3 shall bear an identification label showing the fire test results. That identification label shall be issued by a*

testing and/or inspecting agency approved by the State Fire Marshal.

1. *Identification mark of the approved testing and/or inspecting agency*
2. *Contact and identification information of the manufacturer*
3. *Model number or identification of the product or material*
4. *Pre-test weathering specified in this chapter*
5. *Compliance standard as described under Section R327.3.7*

R327.3.5 Weathering and surface treatment protection.

R327.3.5.1 General. *Material and material assemblies tested in accordance with the requirements of Section R327.3 shall maintain their fire test performance under conditions of use when installed in accordance with the manufacturers instructions.*

R327.3.5.2 Weathering. *Fire-retardant-treated wood and fire-retardant-treated wood shingles and shakes shall meet the fire test performance requirements of this chapter after being subjected to the weathering conditions contained in the following standards, as applicable to the materials and the conditions of use.*

R327.3.5.2.1 Fire-retardant-treated wood. *Fire-retardant-treated wood shall be tested in accordance with ASTM D 2898, "Standard Practice for Accelerated Weathering of Fire-Retardant Treated Wood for Fire Testing (Method A)" and the requirements of Section 2303.2 of the California Building Code.*

R327.3.5.2.2 Fire-retardant-treated wood shingles and shakes. *Fire-retardant-treated wood shingles and shakes shall be approved and listed by the State Fire Marshal in accordance with Section 208(c), Title 19 California Code of Regulations.*

R327.3.5.3 Surface treatment protection. *The use of paints, coatings, stains or other surface treatments are not an approved method of protection as required in this section.*

R327.3.6 Alternates for materials, design, tests and methods of construction. *The enforcing agency is permitted to modify the provisions of this chapter for site-specific conditions in accordance with Section 1.11.2.4. When required by the enforcing agency for the purposes of granting modifications, a fire protection plan shall be submitted in accordance with the California Fire Code, Chapter 49.*

R327.3.7 Standards of quality. *The State Fire Marshal standards for exterior wildfire exposure protection listed below and as referenced in this chapter are located in the California Referenced Standards Code, Part 12 and Chapter 44 of this code.*

SFM Standard 12-7A-1, *Exterior Wall Siding and Sheathing. A fire resistance test standard consisting of a 150 kW intensity direct flame exposure for a 10 minutes duration.*

SFM Standard 12-7A-2, *Exterior Windows. A fire resistance test standard consisting of a 150 kW intensity direct flame exposure for a 8 minutes duration.*

SFM Standard 12-7A-3, *Horizontal Projection Underside. A fire resistance test standard consisting of a 300 kW intensity direct flame exposure for a 10 minute duration.*

SFM Standard 12-7A-4, *Decking. A two-part test consisting of a heat release rate (Part A) deck assembly combustion test with an under deck exposure of 80 kW intensity direct flame for a 3 minute duration, and a (Part B) sustained deck assembly combustion test consisting of a deck upper surface burning ember exposure with a 12 mph wind for 40 minutes using a 2.2lb (1kg) burning "Class A" size 12 inch x 12 inch x 2.25inch (300 mm x 300 mm x 57mm) roof test brand.*

SFM Standard 12-7A-4A, *Decking Alternate Method A. A heat release rate deck assembly combustion test with an under deck exposure of 80 kW intensity direct flame for a 3 minute duration,*

SFM Standard 12-7A-5, *Ignition-resistant Material. A generic building material surface burning flame spread test standard consisting of an extended 30 minute ASTM E 84 or UL 723 test method as is used for Fire-Retardant-Treated wood.*

SECTION R327.4
IGNITION RESISTANT CONSTRUCTION

R327.4.1 General. *The materials prescribed herein for ignition resistance shall conform to the requirements of this chapter.*

R327.4.2 Ignition-resistant material. *Ignition-resistant material shall be determined in accordance with the test procedures set forth in SFM Standard 12-7A-5 "Ignition-Resistant Material" or in accordance with this section.*

R327.4.3 Alternative methods for determining ignition-resistant material. *Any one of the following shall be accepted as meeting the definition of ignition-resistant material:*

1. *Noncombustible material. Material that complies with the definition for noncombustible materials in Section R202.*
2. *Fire-retardant-treated wood. Fire-retardant-treated wood identified for exterior use that complies with the requirements of Section 2303.2 of the California Building Code.*
3. *Fire-retardant-treated wood shingles and shakes. Fire-retardant-treated wood shingles and shakes, as defined in Section 1505.6 of the California Building Code and listed by State Fire Marshal for use as "Class B" roof covering, shall be accepted as an igni-*

tion-resistant wall covering material when installed over solid sheathing.

SECTION R327.5
ROOFING

R327.5.1 General. *Roofs shall comply with the requirements of Sections R327 and R902. Roofs shall have a roofing assembly installed in accordance with its listing and the manufacturer's installation instructions.*

R327.5.2 Roof coverings. *Where the roof profile allows a space between the roof covering and roof decking, the spaces shall be constructed to prevent the intrusion of flames and embers, be firestopped with approved materials or have one layer of minimum 72 pound (32.4 kg) mineral-surfaced nonperforated cap sheet complying with ASTM D 3909 installed over the combustible decking.*

R327.5.3 Roof valleys. *Where valley flashing is installed, the flashing shall be not less than 0.019-inch (0.48 mm) No. 26 gage galvanized sheet corrosion-resistant metal installed over not less than one layer of minimum 72-pound (32.4 kg) mineral-surfaced nonperforated cap sheet complying with ASTM D 3909, at least 36-inch-wide (914 mm) running the full length of the valley.*

R327.5.4 Roof gutters. *Roof gutters shall be provided with the means to prevent the accumulation of leaves and debris in the gutter.*

SECTION R327.6
VENTS

R327.6.1 General. *Where provided, ventilation openings for enclosed attics, enclosed eave soffit spaces, enclosed rafter spaces formed where ceilings are applied directly to the underside of roof rafters, and underfloor ventilation shall be in accordance with Section 1203 of the California Building Code and Sections R327.6.1 through R327.6.3 of this section to resist building ignition from the intrusion of burning embers and flame through the ventilation openings.*

R327.6.2 Requirements. *Ventilation openings for enclosed attics, enclosed eave soffit spaces, enclosed rafter spaces formed where ceilings are applied directly to the underside of roof rafters, and underfloor ventilation openings shall be fully covered with metal wire mesh, vents, other materials or other devices that meet the following requirements:*

1. *The dimensions of the openings therein shall be a minimum of $^1/_{16}$th inch (1.6 mm) and shall not exceed $^1/_8$th inch (3.2mm).*
2. *The materials used shall be noncombustible.*

   Exception: Vents located under the roof covering, along the ridge of roofs, with the exposed surface of the vent covered by noncombustible wire mesh, may be of combustible materials.
3. *The materials used shall be corrosion resistant.*

R327.6.3 Ventilation openings on the underside of eaves and cornices: *Vents shall not be installed on the underside of eaves and cornices.*

Exceptions:

1. *The enforcing agency may accept or approve special eave and cornice vents that resist the intrusion of flame and burning embers.*
2. *Vents complying with the requirements of Section R327.6.2 may be installed on the underside of eaves and cornices in accordance with either one of the following conditions:*

   2.1. *The attic space being ventilated is fully protected by an automatic sprinkler system installed in accordance with Section 903.3.1.1 of the California Building Code or,*

   2.2. *The exterior wall covering and exposed underside of the eave are of noncombustible material, or ignition-resistant-materials as determined in accordance with SFM Standard 12-7A-5 Ignition-Resistant Material and the vent is located more than 12 feet from the ground or walking surface of a deck, porch, patio, or similar surface.*

SFM-SECTION R327.7
EXTERIOR COVERING

R327.7.1 Scope. *The provisions of this section shall govern the materials and construction methods used to resist building ignition and/or safeguard against the intrusion of flames resulting from small ember and short-term direct flame contact exposure.*

R327.7.2 General. *The following exterior covering materials and/or assemblies shall comply with this section:*

1. *Exterior wall covering material*
2. *Exterior wall assembly*
3. *Exterior exposed underside of roof eave overhangs*
4. *Exterior exposed underside of roof eave soffits*
5. *Exposed underside of exterior porch ceilings*
6. *Exterior exposed underside of floor projections*
7. *Exterior underfloor areas*

Exceptions:

1. *Exterior wall architectural trim, embellishments, fascias, and gutters*
2. *Roof or wall top cornice projections and similar assemblies*
3. *Roof assembly projections over gable end walls*

4. *Solid wood rafter tails and solid wood blocking installed between rafters having minimum dimension 2 inch (50.8 mm) nominal*
5. *Deck walking surfaces shall comply with Section R327.9 only*

R327.7.3. Exterior walls. *The exterior wall covering or wall assembly shall comply with one of the following requirements:*

1. *Noncombustible material*
2. *Ignition-resistant material*
3. *Heavy-timber exterior wall assembly*
4. *Log wall construction assembly*
5. *Wall assemblies that meet the performance criteria in accordance with the test procedures for a 10-minute direct flame contact exposure test set forth in SFM Standard 12-7A-1*

Exceptions: *Any of the following shall be deemed to meet the assembly performance criteria and intent of this section:*

1. *One layer of $^5/_8$-inch Type X gypsum sheathing applied behind the exterior covering or cladding on the exterior side of the framing.*
2. *The exterior portion of a 1-hour fire resistive exterior wall assembly designed for exterior fire exposure including assemblies using the gypsum panel and sheathing products listed in the Gypsum Association Fire Resistance Design Manual.*

R327.7.3.1 Extent of exterior wall covering. *Exterior wall coverings shall extend from the top of the foundation to the roof, and terminate at 2 inch (50.8 mm) nominal solid wood blocking between rafters at all roof overhangs, or in the case of enclosed eaves, terminate at the enclosure.*

R327.7.4 Open roof eaves. *The exposed roof deck on the underside of unenclosed roof eaves shall consist of one of the following:*

1. *Noncombustible material*
2. *Ignition-resistant material*
3. *One layer of $^5/_8$-inch Type X gypsum sheathing applied behind an exterior covering on the underside exterior of the roof deck*
4. *The exterior portion of a 1-hour fire resistive exterior wall assembly applied to the underside of the roof deck designed for exterior fire exposure including assemblies using the gypsum panel and sheathing products listed in the Gypsum Association Fire Resistance Design Manual*

Exceptions: *The following materials do not require protection:*

1. *Solid wood rafter tails on the exposed underside of open roof eaves having a minimum nominal dimension of 2 inch (50.8 mm)*
2. *Solid wood blocking installed between rafter tails on the exposed underside of open roof eaves having a minimum nominal dimension of 2 inch (50.8 mm)*
3. *Gable end overhangs and roof assembly projections beyond an exterior wall other than at the lower end of the rafter tails*
4. *Fascia and other architectural trim boards*

R327.7.5 Enclosed roof eaves and roof eave soffits. *The exposed underside of enclosed roof eaves having either a boxed-in roof eave soffit with a horizontal underside, or sloping rafter tails with an exterior covering applied to the underside of the rafter tails, shall be protected by one of the following:*

1. *Noncombustible material*
2. *Ignition-resistant material*
3. *One layer of $^5/_8$-inch Type X gypsum sheathing applied behind an exterior covering on the underside of the rafter tails or soffit*
4. *The exterior portion of a 1-hour fire resistive exterior wall assembly applied to the underside of the rafter tails or soffit including assemblies using the gypsum panel and sheathing products listed in the Gypsum Association Fire Resistance Design Manual*
5. *Boxed-in roof eave soffit assemblies with a horizontal underside that meet the performance criteria in accordance with the test procedures set forth in SFM Standard 12-7A-3*

Exceptions: *The following materials do not require protection:*

1. *Gable end overhangs and roof assembly projections beyond an exterior wall other than at the lower end of the rafter tails*
2. *Fascia and other architectural trim boards*

R327.7.6 Exterior porch ceilings. *The exposed underside of exterior porch ceilings shall be protected by one of the following:*

1. *Noncombustible material*
2. *Ignition-resistant material*
3. *One layer of $^5/_8$-inch Type X gypsum sheathing applied behind the exterior covering on the underside of the ceiling*
4. *The exterior portion of a 1-hour fire resistive exterior wall assembly applied to the underside of the ceiling assembly including assemblies using the gypsum panel and sheathing products listed in the Gypsum Association Fire Resistance Design Manual*
5. *Porch ceiling assemblies with a horizontal underside that meet the performance criteria in accordance with the test procedures set forth in SFM Standard 12-7A-3*

Exception: *Architectural trim boards.*

R327.7.7 Floor projections. *The exposed underside of a cantilevered floor projection where a floor assembly extends over an exterior wall shall be protected by one of the following:*

1. *Noncombustible material*
2. *Ignition-resistant material*
3. *One layer of $^5/_8$-inch Type X gypsum sheathing applied behind an exterior covering on the underside of the floor projection*
4. *The exterior portion of a 1-hour fire resistive exterior wall assembly applied to the underside of the floor projection including assemblies using the gypsum panel and sheathing products listed in the Gypsum Association Fire Resistance Design Manual*
5. *The underside of a floor projection assembly that meet the performance criteria in accordance with the test procedures set forth in SFM Standard 12-7A-3*

Exception: *Architectural trim boards.*

R327.7.8. Underfloor protection. *The underfloor area of elevated or overhanging buildings shall be enclosed to grade in accordance with the requirements of this chapter or the underside of the exposed underfloor shall consist of one of the following:*

1. *Noncombustible material*
2. *Ignition-resistant material*
3. *One layer of $^5/_8$-inch Type X gypsum sheathing applied behind an exterior covering on the underside of the floor projection*
4. *The exterior portion of a 1-hour fire resistive exterior wall assembly applied to the underside of the floor including assemblies using the gypsum panel and sheathing products listed in the Gypsum Association Fire Resistance Design Manual*
5. *The underside of a floor assembly that meets the performance criteria in accordance with the test procedures set forth in SFM Standard 12-7A-3*

Exception: *Heavy-timber structural columns and beams do not require protection.*

R327.7.9 Underside of appendages. *When required by the enforcing agency the underside of overhanging appendages shall be enclosed to grade in accordance with the requirements of this chapter or the underside of the exposed underfloor shall consist of one of the following:*

1. *Noncombustible material*
2. *Ignition-resistant material*
3. *One layer of $^5/_8$-inch Type X gypsum sheathing applied behind an exterior covering on the underside of the floor projection*
4. *The exterior portion of a 1-hour fire resistive exterior wall assembly applied to the underside of the floor including assemblies using the gypsum panel and sheathing products listed in the Gypsum Association Fire Resistance Design Manual*
5. *The underside of a floor assembly that meets the performance criteria in accordance with the test procedures set forth in SFM Standard 12-7A-3*

Exception: *Heavy-timber structural columns and beams do not require protection.*

SECTION R327.8
EXTERIOR WINDOWS AND DOORS

R327.8.1 General.

R327.8.2 Exterior glazing. *The following exterior glazing materials and/or assemblies shall comply with this section:*

1. *Exterior windows*
2. *Exterior glazed doors*
3. *Glazed openings within exterior doors*
4. *Glazed openings within exterior garage doors*
5. *Exterior structural glass veneer*

R327.8.2.1 Exterior windows and exterior glazed door assembly requirements. *Exterior windows and exterior glazed door assemblies shall comply with one of the following requirements:*

1. *Be constructed of multipane glazing with a minimum of one tempered pane meeting the requirements of Section 2406 Safety Glazing, or*
2. *Be constructed of glass block units, or*
3. *Have a fire-resistance rating of not less than 20 minutes when tested according to NFPA 257, or*
5. *Be tested to meet the performance requirements of SFM Standard 12-7A-2.*

R327.8.2.2 Structural glass veneer. *The wall assembly behind structural glass veneer shall comply with Section R327.7.3.*

R327.8.3 Exterior doors. *Exterior doors shall comply with one of the following:*

1. *The exterior surface or cladding shall be of noncombustible or ignition-resistant material, or*
2. *Shall be constructed of solid core wood that comply with the following requirements:*
   - *2.1. Stiles and rails shall not be less than $1^3/_8$ inches thick*
   - *2.2. Raised panels shall not be less than $1^1/_4$ inches thick, except for the exterior perimeter of the raised panel that may taper to a tongue not less than $^3/_8$ inch thick.*
3. *Shall have a fire-resistance rating of not less than 20 minutes when tested according to NFPA 252.*
4. *Shall be tested to meet the performance requirements of SFM Standard 12-7A-1.*

R327.8.3.1 Exterior door glazing. *Glazing in exterior doors shall comply with Section R327.8.2.1.*

SECTION R327.9
DECKING

R327.9.1 General. *The walking surface material of decks, porches, balconies and stairs shall comply with the requirements of this section.*

R327.9.2 Where required. *The walking surface material of decks, porches, balconies and stairs shall comply with the requirements of this section when any portion of such surface is within 10 feet (3048 mm) of the building.*

R327.9.3 Decking surfaces. *The walking surface material of decks, porches, balconies and stairs shall be constructed with one of the following materials:*

1. *Ignition-resistant material that complies with the performance requirements of both SFM Standard 12-7A-4 and SFM Standard 12-7A-5*
2. *Exterior fire retardant treated wood*
3. *Noncombustible material*
4. *Any material that complies with the performance requirements of SFM Standard 12-7A-4A when attached exterior wall covering is also either noncombustible or ignition-resistant material*

Exception: *Wall material may be of any material that otherwise complies with this chapter when the decking surface material complies with the performance requirements ASTM E 84 with a Class B flame spread rating.*

SECTION R327.10
ACCESSORY STRUCTURES

R327.10.1 General. *Accessory and miscellaneous structures, other than buildings covered by Section R327.1.3, which pose a significant exterior exposure hazard to applicable buildings during wildfires shall be constructed to conform to the ignition resistance requirements of this section.*

R327.10.2 Applicability. *The provisions of this section shall apply to trellises, arbors, patio covers, carports, gazebos and similar structures of an accessory or miscellaneous character.*

Exceptions:

1. *Decks shall comply with the requirements of Section R327.9.*
2. *Awnings and canopies shall comply with the requirements of Section 3105 of the California Building Code.*

R327.10.3 Where required. *Accessory structures shall comply with the requirements of this section.*

R327.10.3.1 *Attached accessory structures shall comply with the requirements of this section.*

R327.10.3.2 *When required by the enforcing agency, detached accessory structures within 50 feet of an applicable building shall comply with the requirements of this section.*

R327.10.4. Requirements. *When required by the enforcing agency accessory structures shall be constructed of noncombustible or ignition-resistant materials.*

SECTION R328
ELECTRIC VEHICLE

R328.1 Electric vehicle. *An automotive-type vehicle for highway use, such as passenger automobiles, buses, trucks, vans and the like, primarily powered by an electric motor that draws current from a rechargeable storage battery, fuel cell, photovoltaic array or other source of electric current. For the purpose of this chapter, electric motorcycles and similar type vehicles and off-road self-propelled electric vehicles such as industrial trucks, hoists, lifts, transports, golf carts, airline ground support equipment, tractors, boats and the like, are not included.*

R328.2 Charging. *In any building or interior area used for charging electric vehicles, electrical equipment shall be installed in accordance with the California Electrical Code.*

R328.3 Ventilation. *Mechanical exhaust ventilation, when required by the California Electrical Code shall be provided at a rate as required by Article 625 or as required by Section 1203 of the California Building Code whichever is greater. The ventilation system shall include both the supply and exhaust equipment and shall be permanently installed and located to intake supply air from the outdoors, and vent the exhaust directly to, the outdoors without conducting the exhaust air through other spaces within the building.*

Exception: *Positive pressure ventilation systems shall only be allowed in buildings or areas that have been designed and approved for that application.*

R328.4 Electrical interface. *The electrical supply circuit to electrically powered mechanical ventilation equipment shall be interlocked with the recharging equipment used to supply the vehicle(s) being charged, and shall remain energized during the entire charging cycle. Electric vehicle recharging equipment shall be marked or labeled in accordance with the California Electrical Code.*

Exceptions:

1. *Exhaust ventilation shall not be required in areas with an approved engineered ventilation system, which maintains a hydrogen gas concentration at less than 25 percent of the lower flammability limit.*
2. *Mechanical exhaust ventilation for hydrogen shall not be required where the charging equipment utilized is installed and listed for indoor charging of electric vehicles without ventilation.*

WILDLAND URBAN INTERFACE CLASSIFICATION

The following information is used by the Department of Housing and Community Development (HCD) in order to determine the correct installation of materials and construction methods for exterior wildfire exposure. Applicants should obtain information as indicated below from the local authority having jurisdiction, and are requested to submit the following information with the HCD 415 and/or HCD 50 form at the time of permit application to HCD.

Applicant Name _____

Date _____ Telephone No. _____

Applicant to complete items 1 through 3

1. Site Location of Home: _____
2. Assessor Parcel No. (if known): _____
3. Mobilehome Park Name (if applicable) _____

Obtain Assistance from Local Authority Having Jurisdiction in completion of the following:

1. Fire Department or District: _____
2. Contact Person and Telephone _____

The home described above is or is intended to be located in an area as noted below:

☐ State Responsibility Area (SRA)

☐ Very High ☐ High ☐ Moderate ☐ Unzoned

☐ (LRA) Local Agency Very-High Severity Zone

☐ (LRA) Wildland Urban Interface Area – Specify the ignition-resistant construction require by the local authority having jurisdiction for fire protection on this property _____

_____

☐ N/A

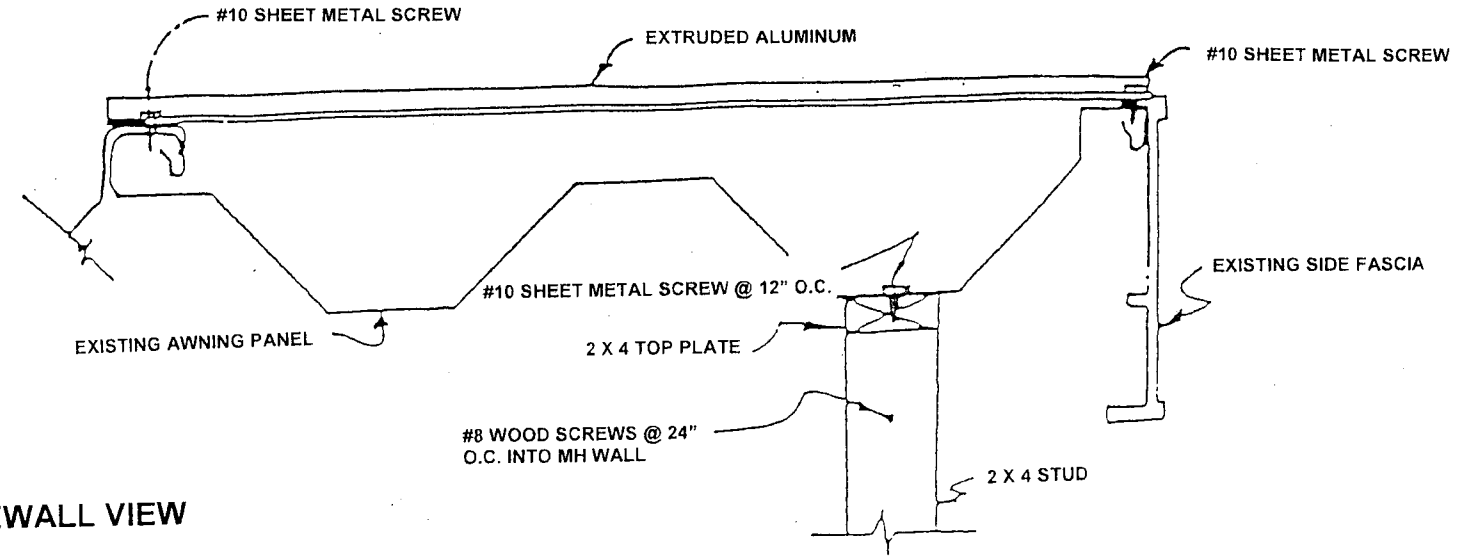

SIDEWALL VIEW

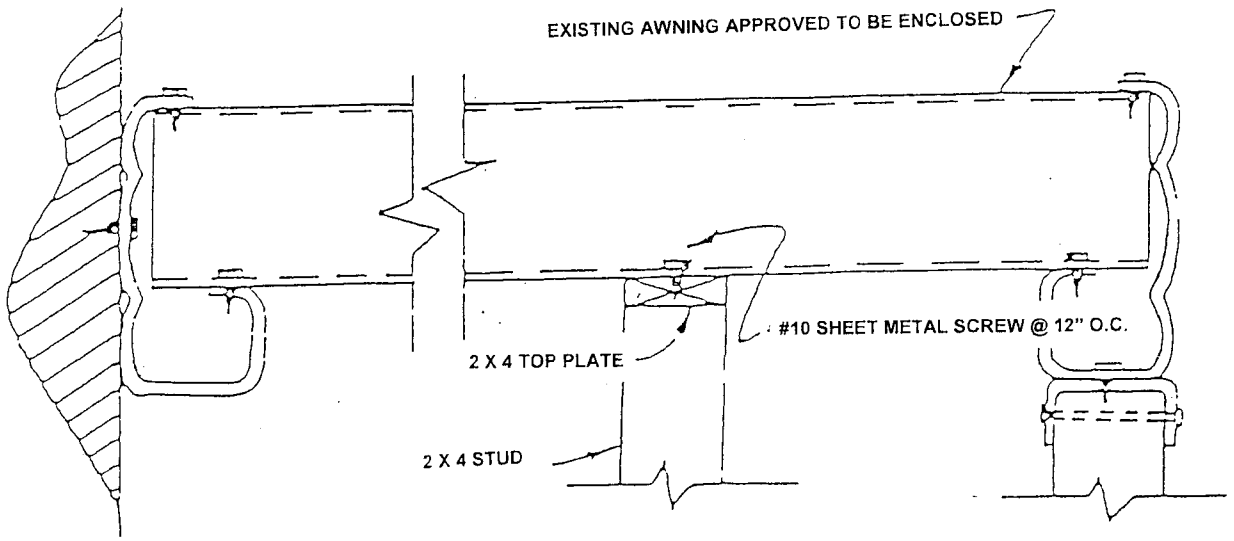

FRONT WALL VIEW

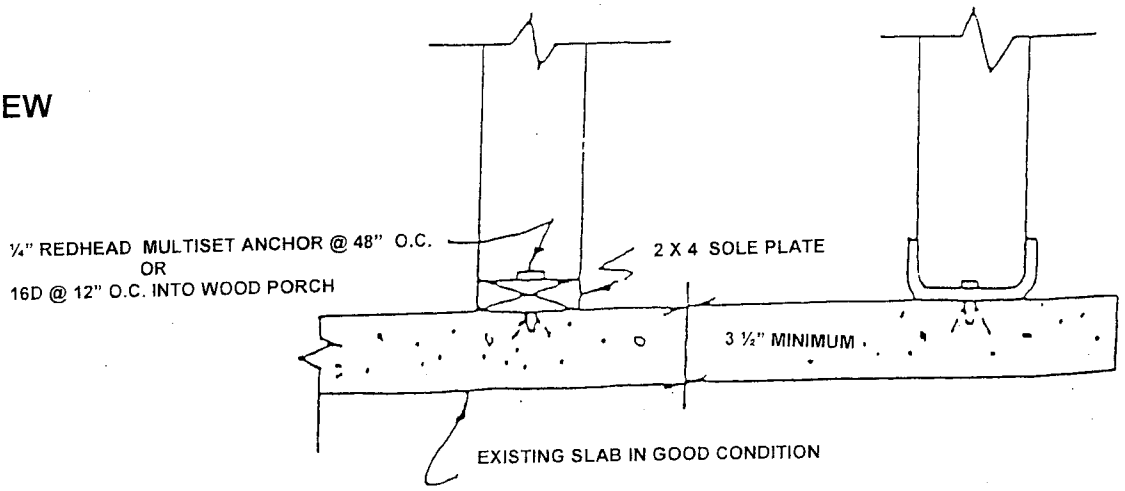

DEPT. OF HOUSING AND COMMUNITY DEVELOPMENT
FREESTANDING AWNING, CARPORT, DECK, RAMADA OR ENCLOSURE PLANS INSTALLED ON A MOBILEHOME LOT
(HCD PLANS ONLY)

THIS FEE SCHEDULE BECOMES EFFECTIVE FEBRUARY 1, 2009

SQ. FOOTAGE PER STRUCTURE	PERMIT FEE	VALUATION	TOTAL FEES
0 - 54	196.00	45.00	196.00
55 – 82	196.00	54.00	196.00
82 – 108	196.00	63.00	196.00
109 – 135	196.00	72.00	196.00
136 – 162	196.00	81.00	196.00
163 – 190	196.00	90.00	196.00
191 – 217	196.00	99.00	196.00
218 – 244	196.00	108.00	196.00
245 – 271	196.00	117.00	196.00
272 – 298	196.00	126.00	196.00
299 – 325	196.00	135.00	196.00
326 – 352	196.00	144.00	196.00
353 - 379	196.00	153.00	196.00
380 – 406	196.00	162.00	196.00
407 – 433	196.00	171.00	196.00
434 – 460	196.00	180.00	196.00
461 – 488	196.00	189.00	196.00
489 – 515	196.00	198.00	198.00
516 – 542	196.00	207.00	207.00
543 – 569	196.00	216.00	216.00
570 – 596	196.00	225.00	225.00
597– 623	196.00	234.00	234.00
624 – 651	196.00	243.00	243.00

NOTES:

Any deviation from the HCD plans shall be subject to a minimum plan check fee of $203.00 per hour.

Add $7.00 to this fee schedule to alter the park lot electrical service for power to the enclosure. If the MH-Unit is to be altered to gain power, a separate permit (HCD 415) with a $196.00 fee is required.

(Evaluation fees are based on regulatory provisions identified in the California State Building Code)

Revised 1/09

DEPT. OF HOUSING AND COMMUNITY DEVELOPMENT
FREESTANDING AWNING, CARPORT, DECK, RAMADA OR ENCLOSURE PLANS INSTALLED ON A MOBILEHOME LOT
(NON HCD PLAN)

THIS FEE SCHEDULE BECOMES EFFECTIVE FEBRUARY 1, 2009

SQ. FOOTAGE PER STRUCTURE	PERMIT FEE	VALUATION	PLAN CHECK	TOTAL FEES
0 - 54	196.00	45.00	98.00	294.00
55 – 82	196.00	54.00	98.00	294.00
83 – 108	196.00	63.00	98.00	294.00
109 – 135	196.00	72.00	98.00	294.00
136 – 162	196.00	81.00	98.00	294.00
163 – 190	196.00	90.00	98.00	294.00
191 – 217	196.00	99.00	98.00	294.00
218 – 244	196.00	108.00	98.00	294.00
245 – 271	196.00	117.00	98.00	294.00
272 – 298	196.00	126.00	98.00	294.00
299 – 325	196.00	135.00	98.00	294.00
326 – 352	196.00	144.00	98.00	294.00
353 - 379	196.00	153.00	98.00	294.00
380 – 406	196.00	162.00	98.00	294.00
407 – 433	196.00	171.00	98.00	294.00
434 – 460	196.00	180.00	98.00	294.00
461 – 488	196.00	189.00	98.00	294.00
489 – 515	196.00	198.00	99.00	297.00
516 – 542	196.00	207.00	103.50	310.50
543 – 569	196.00	216.00	108.00	324.00
570 – 596	196.00	225.00	112.50	337.50
597 – 623	196.00	234.00	117.00	351.00
624 – 651	196.00	243.00	121.50	364.50

NOTES:

Add $7.00 to this fee schedule to alter the park lot electrical service for power to the enclosure. If the MH-Unit is to be altered to gain power, a separate permit (HCD 415) with a $196.00 fee is required.

(Evaluation fees are based on regulatory provisions identified in the California State Building Code)

Revised 1/09