Requirements for the Construction of Awning Enclosures in Special Occupancy Parks

The following items are needed to apply for an HCD accessory building or structure permit:

- Review and complete an Application for Permit to Construct (HCD 50) included in this handout. Follow the instructions on the back of the form and make sure that park management signs section #5. This application requires an original (wet) signature of the management along with two copies.
- The application for the permit to construct shall be accompanied by fees as specified on the fee schedule when using the approved plan in this handout. Any deviation from the included plans will require a plan check and plan check fees.
- Review and complete a Lot Plot Plan (HCD 538) included in handout, indicating where the accessory building or structure is to be constructed on the lot to include dimensions of the structure, setbacks from lot lines, and separations from other structures. Follow the instructions on the back of the form and make sure that park management signs the "STATEMENT OF RESPONSIBILITY" on the front of this document. This application also requires an original (wet) signature of the management along with two copies.
- Review and complete the "Classification of Fire Hazard Severity Zone" form to determine if you are located in a Fire Hazard Severity Zone or a Wildland-Urban Interface Fire Area (WUI).
- An accessory building or structure shall be designed and constructed to withstand the snow loads for the area where it is constructed and comply with sections 1433 &1433.1.

Submit the completed and signed permit and plot plan along with two copies to the office listed on the back of the Permit to Construct in addition to the following documentation:

- Three (3) complete sets of plans and specifications for the work to be performed.
- Plans and specifications submitted shall be of sufficient clarity to indicate the work proposed.
- When utilizing the approved plans and specifications included in this handout there shall be no deviation.
- An approved set of plans and specifications and a copy of the permit to construct shall be kept on the job site in a conspicuous location until the enforcement agency has approved the final inspection.
- The work performed shall follow the plans and specifications without deviation.

The completed documentation can be submitted in person or through the mail to either of the Area Offices listed on the back of the permit to construct.

Awning Enclosures in Special Occupancy Parks

This handout contains the information and code requirements to build an awning enclosure within a special occupancy park.

Part I Overview of the regulations for accessory structures in parks, found in the California Code of Regulations.

Part II Overview of the requirements for accessory structures in parks, found in the California Residential Code and covers: Ignition Resistant Construction of Roofing and Exterior Covering.

Part III Sections and details for the construction of an Awning Enclosure.

Part IV A schedule of permit fees associated with the construction of Awning Enclosures, HCD 50, HCD 538 and Classification of Fire Hazard Severity Zone form.

This handout and the forms contained in it are available on line at:
http://www.hcd.ca.gov/codes/mp/OnlineForms.html

- **Accessory building or structure**. Any awning, window awning, cabana, ramada, storage cabinet, storage building, private garage, carport, fence, stairway, ramp, or porch, or any other building or structure other than a patio, established for the use of the occupant of a unit.
- **Awning.** An accessory structure, used for shade or weather protection, supported by one or more posts or columns and partially supported by a unit or other accessory structure installed, erected, or used on a lot.
- **Awning Enclosure.** An enclosure designed for outdoor recreational purposes, not for habitation, constructed under an awning or freestanding awning, which may include a screen room, and either an accessory building or structure, or a building component.
- **Awning, Freestanding**. An accessory structure, used for shade or weather protection, supported entirely by columns or posts and, other than with flashing, not attached to or supported by a unit or other accessory structure.
- **Occupied Area**. The total of all the space occupied by a unit, including eave overhangs and projections; building components; and all accessory buildings or structures on a lot.

Part I

California Code of Regulations - Title 25, Division 1, Chapter 2, Article 9

Requirements for Accessory Buildings and Structures

§ 2422. Application and Scope

(a) Except as otherwise noted, the requirements of this article shall apply to the construction, use, maintenance, and occupancy of accessory buildings or structures and building components constructed or installed adjacent to units both within and outside of parks.

(b) Accessory buildings or structures, or building components that are constructed and maintained in accordance with those statutes and regulations which were in effect on the date of original construction, are not subject to the requirements of subsequent regulations. An accessory building or structure or building component that is moved to a different location shall be subject to the permit to construct requirements of this chapter. Any alterations or additions must comply with the current provisions of this chapter.

(c) Accessory structures, excluding those not requiring a permit to construct as set forth in section 2018 of this chapter, shall not be attached to, be supported by, or transmit any loads to, a recreational vehicle.

(d) Accessory buildings and structures or building components, installed on a MH-Unit lot in a special occupancy park, shall comply with the exiting requirements in section 1429 of chapter 2.

(e) Stairways and ramps required for ingress and egress for camping cabins shall be freestanding and are the only accessory structures permitted on a lot with a camping cabin.

§ 2424. Regulated Structures

(a) Accessory buildings or structures or building components which do not comply with this article or are deemed to be unsafe by the enforcement agency shall not be allowed, constructed, or occupied.

(b) A permit shall be obtained from the enforcement agency to construct or install an accessory building or structure as required by Article 1 of this chapter, unless specifically exempted in section 2018 of this chapter.

(c) Cabanas, garages and storage buildings shall not be constructed or installed in special occupancy parks except on lots designated for MH-Units as specified in section 2118 of this chapter.

§ 2426. Accessory Buildings or Structures and Building Components Installed in Fire Hazard Severity Zones

(a) Accessory buildings or structures or building components constructed or installed in parks in a State Responsibility Area Fire Hazard Severity Zone or a local Very–High Fire Hazard Severity Zone as indicated on the California Department of Forestry and Fire Protection's Fire Hazard Severity Zone Maps, shall comply with Title 24, Part 2.5, Chapter 3, section R327 of the California Residential Code (CRC) which is hereby incorporated by reference with the exception of the following provisions: Sections R327.1.5, R327.2 (Fire Protection Plan) and R327.3.6.

(b) Accessory buildings or structures or building components constructed or installed outside of parks in a State Responsibility Area Fire Hazard Severity Zone, a local Very-High Fire Hazard Severity Zone, or a local Wildland-Urban Interface Fire Area shall comply with the provisions of the CRC, Title 24, Part 2.5, Chapter 3, section R327.

§ 2428. Location

(a) In parks, accessory buildings or structures, or any part thereof, on a lot shall maintain the following setbacks from lot lines:

(1) When constructed of noncombustible materials:

(A) may be up to the lot line, provided a minimum three (3)-foot clearance is maintained from any other unit, accessory building or structure, or building component on adjacent lots.

(2) When constructed of combustible materials:

(A) a minimum three (3) foot clearance from all lot lines, and(B) a minimum six (6) foot clearance from any other unit, accessory buildings or structures, or building components on adjacent lots constructed of combustible materials. (b) Location requirements governing cabanas, private garages, and storage buildings, permitted by section 2118 of this chapter, are found in Article 9 of Chapter 2 of this division.

(c) Stairways with landings not to exceed twelve (12) square feet may be installed to the lot line provided they are located a minimum of three (3) feet from any unit or accessory building or structure including another stairway on an adjacent lot. However, if the stairway is an up-and-over design (steps up the front and down the back) that provides

access to the lot beyond the stairway, it does not need to maintain the separation from a unit or accessory building or structure, including another stairway, on an adjacent lot.

(d) Fencing of any material, that meets the requirements of section 2514 of this article, may be installed up to a lot line.

(e) No portion of an accessory building or structure, or building component shall project over or beyond a lot line.

(f) Any permitted accessory building or structure, or building component may be installed up to a lot line bordering a roadway or common area provided there is no combustible building or structure in the common area within six (6) feet and no structure of any kind within three (3) feet of any portion of the accessory building or structure, or building component. The maximum seventy-five percent (75%) lot coverage allowed by section 2110 of this chapter shall be maintained..

(g) Wood awning or carport support posts four (4) inches or greater in nominal thickness may be located up to a lot line provided the remainder of the awning or carport is composed of noncombustible material.

§ 2429. Required Exits

(a) An awning enclosure may be constructed or installed to enclose an emergency exit window from a sleeping room within a unit provided the enclosed area adjacent to the emergency exit window has a door not less than twenty–eight (28) inches in width and seventy–four (74) inches in height providing direct access to the outside. The exit doorway from the enclosed accessory building or structure, or building component shall comply with the exit illumination requirements contained in the California Residential Code and lighting outlet requirements contained in the California Electrical code.

(b) An awning enclosure which encloses a required exit from the unit shall have a doorway complying with subsection (a) located as close as possible to that exit. If more than one exit is enclosed, the enclosure shall be provided with the same number of exit doorways that comply with subsection (a) as close as possible to the existing unit exits.

(c) An awning enclosure that encloses a required exit shall not be divided with interior walls or barriers unless the divided areas contain additional exit doors serving the divided areas that comply with subsection (a).

§ 2432. Construction

(a) Construction and installation of accessory buildings or structures or building components shall comply with the structural requirements of the California Residential Code, except as otherwise provided by this article. The enforcement agency may require that accessory buildings and structures or building components be designed and constructed to withstand live loads, vertical uplift or horizontal forces from any direction in excess of the minimum loads specified in this chapter, based on local geologic, topographic, or climatic conditions, when approved by the department.

(b) Accessory buildings and structures constructed of aluminum or aluminum alloy shall be designed to conform to the specifications contained in the California Residential Code.

(c) Unless data to substantiate the use of higher values is submitted to the enforcement agency, the allowable loading of accessory buildings and structures or building components on the soil shall not exceed one–thousand five– hundred (1,500) psf vertical soil bearing pressure, one hundred fifty (150) psf of depth lateral soil bearing pressure, and one hundred sixty–seven (167) psf frictional resistance for uncased cast–in place concrete piles.

§ 2433. Roof Live Load

(a) Except as provided in this article, every cabana installed on or after July 31, 1976, or every accessory building or structure or building component installed on or after June 10, 1979, shall have the capacity to resist the applicable minimum snow load of the region in which it is installed or as is provided by this section.

TABLE 2433–1

General Roof Live Load Requirements for Accessory Buildings or Structures and Building Components

Region I		Region II		Region III	
Elevation	**Roof Live Load**	**Elevation**	**Roof Live Load**	**Elevation**	**Roof Live Load**
All Elevations	20 PSF	0-3000 ft.	20 psf	0-2000 ft.	20 psf
		3001 – 3500 ft.	30 psf	2001 – 3000 ft.	30 psf
		3501 – 4000 ft.	60 psf	3001 – 4000 ft.	60 psf

Table 2433–1 shall apply except where either greater or lesser snow loads have been established through survey of the region, and approved by the department.

(1) Region I includes the following counties:

Alameda, Butte, Colusa, Contra Costa, Del Norte, Glenn, Humboldt, Imperial, Kings, Lake, Los Angeles, Marin, Mendocino, Merced, Monterey, Napa, Orange, Sacramento, San Benito, San Diego, San Francisco, San Joaquin, San Luis Obispo, San Mateo, Santa Barbara, Santa Clara, Santa Cruz, Solano, Sonoma, Stanislaus, Sutter, Ventura, Yolo.

(2) Region II includes the following counties:

Amador, Fresno, Inyo, Kern, Modoc, Riverside, San Bernardino, Siskiyou.

(3) Region III includes the following counties:

Alpine, Calaveras, El Dorado, Lassen, Madera, Mariposa, Mono, Nevada, Placer, Plumas, Shasta, Sierra, Tehama, Trinity, Tulare, Tuolumne, Yuba.

(b) Parks that have received approval for a snow roof load maintenance program prior to July 7, 2004, shall maintain the snow roof load maintenance program, as long as accessory buildings or structures, or building components in the park do not meet the minimum roof loads for the area. Accessory buildings or structures or building components installed after July 7, 2004, must have the capacity to resist the applicable minimum roof live loads of the region in which it is installed, as set forth in table 2433–1.

(c) The park owner or operator shall be responsible for the continued management of an existing snow roof load maintenance program approved for the park.

(d) Roof live load requirements shall not apply to storage cabinets.

(e) Accessory structures may be relocated from one park to another and reinstalled under permit within another park provided the requirements for roof live load in the new park are not greater than the requirements of the park in which the accessory structure was previously installed.

§ 2434. Calculations and Test Procedures

(a) The load bearing capacity of elements or assemblies shall be established by calculations in accordance with generally established principles of engineering design. However, when the composition or configuration of elements, assemblies or details of structural members are such that calculations of their safe load–carrying capacity and basic structural integrity cannot be accurately determined in accordance with generally established principles of engineering design, structural properties of such elements or assemblies may be established by the results of tests that are designed and certified by an architect or engineer, with the test results approved by the department.

(b) When any structural design or method of construction is substantiated by calculations and supporting data, the calculations and supporting data shall be approved by an architect or engineer and shall be submitted to the department.

(c) When the design of accessory structures is substantiated by calculations or tests, all structural plans shall be approved by the architect or engineer in charge of the total design.

(d) When any design or method of construction is substantiated by tests, all those tests shall be performed by an approved testing agency acceptable to the department or shall be directed, witnessed, and evaluated by an independent architect or engineer. All test procedures and results shall be reviewed, evaluated, and signed by an architect or engineer. The approved testing agency, architect, or engineer shall submit the evaluation of test results, calculations, and recommendations, to the department. The department may require that a representative of the department witness the test.

§ 2436. Electrical Installations

(a) Electrical equipment and installations within an accessory building or structure or building component and the circuit supplying power shall be installed by a permanent wiring method and shall comply with the requirements for electrical installations of this chapter.

(b) Flexible cord shall not be used to supply an accessory building or structure or building component, or as a substitute for the fixed wiring of an accessory building or structure or building component.

(c) Unless otherwise specified by this article, electrical service provided to an accessory building or structure or building component shall be supplied from the lot service equipment, provided:

(1) a permit is obtained to alter the lot electrical service by installing a separate overcurrent protective device rated not more than the total calculated electrical load, and

(2) the lot service equipment is capable of supplying the additional load, and

(3) the overcurrent protective device and its installation complies with the California Electrical Code.

1. New section filed 7–6–2004; operative 7–6–2004 pursuant to Government Code section 11343.4 (Register 2004, No. 28).

Part I

§ 2438. Mechanical Installations

(a) Fuel burning appliances or equipment shall not be constructed, used, or installed in, or in conjunction with, an accessory building or structure.

(b) No cooking or heating equipment shall be installed in an awning enclosure.

§ 2442. Foam Building System Flammability Standards

The requirements of section 24 of this Title shall apply to the use of any foam plastic or foam plastic building system used in the construction of accessory buildings or structures.

529 HISTORY:
1. New section filed 7–6–2004; operative 7–6–2004 pursuant to Government Code section 11343.4 (Register 2004, No. 28).

§ 2444. Cabanas

(a) Cabanas shall be located only on lots designated for manufactured homes or mobilehomes in accordance with section 2118.

(b) When permitted, cabana construction and installation shall comply with the requirements contained in chapter 2 of this Division.

AUTHORITY:
Note: Authority cited: Section 18865, Health and Safety Code. Reference: Section 18871.3, Health and Safety Code.
HISTORY:
1. New section filed 7–6–2004; operative 7–6–2004 pursuant to Government Code section 11343.4 (Register 2004, No. 28).

§ 2466. Awning—Permitted

An awning may be erected, constructed, or maintained only as an accessory structure to a recreational vehicle located on the same lot.

AUTHORITY:
Note: Authority cited: Section 18865, Health and Safety Code. Reference: Sections 18871.3 and 18872, Health and Safety Code.
HISTORY:
1. New section filed 7–6–2004; operative 7–6–2004 pursuant to Government Code section 11343.4 (Register 2004, No. 28).

§ 2468. Awning—Design and Construction

(a) An awning and its structural parts, except cloth, canvas, or similar flexible materials, shall be designed, constructed, and erected to adequately support all dead loads plus a minimum vertical live load of ten (10) psf except that snow loads shall be used where snow loads exceed this minimum. Requirements for the design of awnings necessary to resist minimum horizontal wind pressure are contained in the California Residential Code.

(b) Awnings shall be completely freestanding and shall not transmit any loads to a recreational vehicle. Exception: portable awnings constructed of cloth, canvas, or other flexible material may be attached to the unit.

(c) Flashing or sealing materials may be used to provide a weather seal between a freestanding awning and a unit. No separation is required between a freestanding awning and an attached awning located on the same lot.

AUTHORITY:
Note: Authority cited: Section 18865, Health and Safety Code. Reference: Section 18871.3, Health and Safety Code.
HISTORY
1. New section filed 7–6–2004; operative 7–6–2004 pursuant to Government Code section 11343.4 (Register 2004, No. 28).
2. Amendment of subsection (a) filed 2–18–2011; operative 2–18–2011 pursuant to Government Code section 11343.4 (Register 2011, No. 7).

§ 2470. Awning—Dimensions

(a) A freestanding awning is not limited as to width or length, except that the total occupied area of a lot, including all accessory building or structures, shall not exceed seventy–five (75) percent of the lot area in accordance with section 2110 of this chapter.

(b) The minimum clear height of any awning shall not be less than seventy–four (74) inches.

AUTHORITY:
Note: Authority cited: Section 18865, Health and Safety Code. Reference: Sections 18871.3 and 18872, Health and Safety Code.
HISTORY:
1. New section filed 7–6–2004; operative 7–6–2004 pursuant to Government Code section 11343.4 (Register 2004, No. 28).

Part I

§ 2472. Awning—Foundations

Concrete slabs may be considered to have an allowable load bearing capacity of three–hundred–fifty (350) pounds per column. The enforcement agency may accept a loading not to exceed five–hundred (500) pounds per column, provided the slab is not less than three and one–half (3 1/2) inches thick and in good condition. The weight of individual poured concrete footings shall be one and one–half (11/2) times the calculated uplift force. The weight of concrete shall be assumed to be not more than one–hundred–forty–five (145) pounds per cubic foot.

AUTHORITY:
Note: Authority cited: Section 18865, Health and Safety Code. Reference: Section 18871.3, Health and Safety Code.
HISTORY:
1. New section filed 7–6–2004; operative 7–6–2004 pursuant to Government Code section 11343.4 (Register 2004, No. 28).

§ 2474. Awning—Enclosures

(a) Awning enclosures shall be used only for recreational or outdoor living purposes and shall not be used as carports or storage rooms nor shall they be constructed or converted for use as a habitable room or a cabana.

(b) Combustible material used for awning enclosures shall not be installed within three (3) feet of the lot line pursuant to section 2428 of this chapter.

(c) Awnings may be enclosed or partially enclosed as follows:

(1) With insect screening or removable flexible plastic material. Awning drop or side curtains shall not be permanently fastened at the sides or bottom. (A permit to construct is not required.)

(2) With rigid, readily removable transparent, or translucent materials.

(3) Awnings may be partially enclosed with solid, opaque panels, provided the panels do not exceed fifty (50) percent of the total wall area.

(4) When an awning is completely enclosed with rigid material, fifty (50) percent of the total wall area shall be translucent or transparent material, of which twenty–five (25) percent of the total wall area shall be able to be opened for ventilation. Exiting requirements shall meet the requirements for a cabana.

(d) Where an awning is erected or constructed immediately adjacent to or over a permanently constructed retaining wall of fire resistant material, there shall be not less than eighteen (18) inches clear ventilating opening between the underside of the awning roof and the top of the wall extending the full length of the awning.

(e) An awning shall not be enclosed unless the enclosure is designed and constructed as a freestanding structure or unless the awning is designed and constructed to withstand the additional forces imposed by the enclosure.

(f) The construction requirements for awning enclosures are contained in the California Residential Code.

(g) Heating, cooking, or fuel burning appliances or equipment shall not be installed or used within an awning enclosure.

(h) An awning enclosure shall be separated from the unit's interior by walls, windows, doors, or sliding glass doors.

(i) When an exit from the unit is enclosed, the exit from the enclosure shall satisfy the exit and lighting requirements contained in section 2429 of this chapter.

Part II

California Residential Code - Title 24, Part 2.5

Requirements for Carport or Awning Construction

Section R327.4 Ignition Resistant Construction

R327.4.1 General. The materials prescribed herein for ignition resistance shall conform to the requirements of this chapter.

R327.4.2 Ignition-resistant material. Ignition-resistant material shall be determined in accordance with the test procedures set forth in SFM Standard 12-7A-5 “Ignition- Resistant Material” or in accordance with this section.

R327.4.3 Alternative methods for determining ignition resistant material. Any one of the following shall be accepted as meeting the definition of ignition-resistant material:

1. Noncombustible material. Material that complies with the definition for noncombustible materials in Section R202.
2. Fire-retardant-treated wood. Fire-retardant-treated wood identified for exterior use that complies with the requirements of Section 2303.2 of the California Building Code.
3. Fire-retardant-treated wood shingles and shakes. Fire-retardant-treated wood shingles and shakes, as defined in Section 1505.6 of the California Building Code and listed by State Fire Marshal for use as “Class B” roof covering, shall be accepted as an ignition-resistant wall covering material when installed over solid sheathing.

Section R327.5 Roofing

R327.5.1 General. Roofs shall comply with the requirements of Sections R327 and R902. Roofs shall have a roofing assembly installed in accordance with its listing and the manufacturer’s installation instructions.

R327.5.2 Roof coverings. Where the roof profile allows a space between the roof covering and roof decking, the spaces shall be constructed to prevent the intrusion of flames and embers, be firestopped with approved materials or have one layer of minimum 72 pound (32.4 kg) mineral- surfaced nonperforated cap sheet complying with ASTM D 3909 installed over the combustible decking.

R327.5.3 Roof valleys. Where valley flashing is installed, the flashing shall be not less than 0.019-inch (0.48 mm) No. 26 gage galvanized sheet corrosion-resistant metal installed over not less than one layer of minimum 72-pound (32.4 kg) mineral-surfaced nonperforated cap sheet complying with ASTM D 3909, at least 36-inch-wide (914 mm) running the full length of the valley.

R327.5.4 Roof gutters. Roof gutters shall be provided with the means to prevent the accumulation of leaves and debris in the gutter.

Section R327.7 Exterior Covering

R327.7.3. Exterior walls. The exterior wall covering or wall assembly shall comply with one of the following requirements:

1. Noncombustible material
2. Ignition-resistant material
3. Heavy-timber exterior wall assembly
4. Log wall construction assembly
5. Wall assemblies that meet the performance criteria in accordance with the test procedures for a 10-minute direct flame contact exposure test set forth in SFM Standard 12-7A-1.

Exceptions: Any of the following shall be deemed to meet the assembly performance criteria and intent of this section:

1. One layer of 5/8-inch Type X gypsum sheathing applied behind the exterior covering or cladding on the exterior side of the framing.
2. The exterior portion of a 1-hour fire resistive exterior wall assembly designed for exterior fire exposure including assemblies using the gypsum panel and sheathing products listed in the Gypsum Association Fire Resistance Design Manual.

Part II

R327.7.3.1 Extent of exterior wall covering. Exterior wall coverings shall extend from the top of the foundation to the roof, and terminate at 2 inch (50.8 mm) nominal solid wood blocking between rafters at all roof overhangs, or in the case of enclosed eaves, terminate at the enclosure.

SECTION R327.8
EXTERIOR WINDOWS AND DOORS

R327.8.2 Exterior glazing. The following exterior glazing materials and/or assemblies shall comply with this section:

1. Exterior windows
2. Exterior glazed doors
3. Glazed openings within exterior doors
4. Glazed openings within exterior garage doors
5. Exterior structural glass veneer

R327.8.2.1 Exterior windows and exterior glazed door assembly requirements. Exterior windows and exterior glazed door assemblies shall comply with one of the following requirements:

1. Be constructed of multipane glazing with a minimum of one tempered pane meeting the requirements of Section 2406 Safety Glazing, or
2. Be constructed of glass block units, or
3. Have a fire-resistance rating of not less than 20 minutes when tested according to NFPA 257, or
5. Be tested to meet the performance requirements of SFM Standard 12-7A-2.

R327.8.2.2 Structural glass veneer. The wall assembly behind structural glass veneer shall comply with Section R327.7.3.

R327.8.3 Exterior doors. Exterior doors shall comply with one of the following:

1. The exterior surface or cladding shall be of noncombustible or ignition-resistant material, or
2. Shall be constructed of solid core wood that comply with the following requirements:

2.1. Stiles and rails shall not be less than 13/8 inches thick

2.2. Raised panels shall not be less than 11/4inches thick, except for the exterior perimeter of the raised panel that may taper to a tongue not less than 3/8 inch thick.

3. Shall have a fire-resistance rating of not less than 20 minutes when tested according to NFPA 252.
4. Shall be tested to meet the performance requirements of SFM Standard 12-7A-1.

R327.8.3.1 Exterior door glazing. Glazing in exterior doors shall comply with Section R327.8.2.1.

State of California
Business, Transportation and Housing Agency
Department of Housing and Community Development
Division of Codes and Standards
Mobilehome and Special Occupancy Parks Programs

APPLICATION FOR PERMIT TO CONSTRUCT

(SEE REVERSE SIDE OF FORM FOR INSTRUCTIONS AND ADDITIONAL INFORMATION)

CONTRACTOR/OWNER BUILDER DECLARATIONS
Not required for commercial modulars or Recreational Vehicles

1. LICENSED CONTRACTORS DECLARATION
I hereby affirm under penalty of perjury that I am licensed under provisions of Chapter 9 (commencing with Section 7000) of Division 3 of the Business and Professions Code, and my license is in full force and effect.

License Class_____Lic. No. _____ Exp. Date_____

Contractor _____Date _____

2. OWNER-BUILDER DECLARATION
I hereby affirm under penalty of perjury that I am exempt from the Contractors License Law for the following reason (Sec. 7031.5), Business and Professions Code: Any city or county which requires a permit to construct, alter, improve, demolish, or repair any structure, prior to its issuance, also requires the applicant for such permit to file a signed statement that he or she is licensed pursuant to the provisions of the Contractors License Law (Chapter 9 (commencing with Section 7000) of Division 3 of the Business and Professions Code) or that he or she is exempt therefrom and the basis for the alleged exemption. Any violation of Section 7031.5 by any applicant for a permit subjects the applicant to a civil penalty of not more than five hundred dollars($500).):

☐ I, as owner of the property, or my employees with wages as their sole compensation, will do the work, and the structure is not intended of offered for sale (Sec. 7044, Business and Professions Code: The Contractors License Law does not apply to an owner of property who builds or improves thereon, and who does such work himself or herself or through his or her own employees, provided that such improvements are not intended or offered for sale. If, however, the building or improvement is sold within one year of completion, the owner-builder will have the burden of proving that he or she did not build or improve for the purpose of sale.).

☐ I, as owner of the property, am exclusively contracting with licensed contractors to construct the project (Sec. 7044, Business and Professions Code: The Contractors License Law does not apply to an owner of property who builds or improves thereon, and who contracts for such projects with a contractor(s) licensed pursuant to the Contractors License Law.).
☐ I am exempt under Sec. _____, B. & P.C. for this reason:

_____

Owner_____Date_____

3. WORKERS' COMPENSATION DECLARATION
I hereby affirm under penalty of perjury one of the following declarations:
☐ I have and will maintain a certificate of consent to self-insure for workers' compensation, as provided for by Section 3700 of the Labor Code, for the performance of the work for which this permit is issued.
☐ I have and will maintain workers' compensation insurance, as required by Section 3700 of the Labor Code, for the performance of the work for which this permit is issued. My workers' compensation insurance carrier and policy number are:
Carrier _____

Policy Number_____
(This section need not be completed if the permit is for one hundred dollars ($100) or less).

☐ I certify that in the performance of the work for which this permit is issued, I shall not employ any person in any manner so as to become subject to workers' compensation laws of California, and agree that if I should become subject to workers' compensation provisions of Section 3700 of the Labor Code, I shall forthwith comply with those provisions.
Applicant
_____Date_____

WARNING: FAILURE TO SECURE WORKERS' COMPENSATION COVERAGE IS UNLAWFUL, AND SHALL SUBJECT AN EMPLOYER TO CRIMINAL PENALTIES AND CIVIL FINES UP TO ONE HUNDRED THOUSAND DOLLARS ($100,000), IN ADDITION TO THE COST OF COMPENSATION, DAMAGES AS PROVIDED FOR IN SECTION 3706 OF THE LABOR CODE, INTEREST, AND ATTORNEY'S FEES.

4. CONSTRUCTION LENDING AGENCY
I hereby affirm under penalty of perjury that there is a construction lending agency for the performance of the work for which this permit is issued (Sec.3097, Civ. C.).

Lender's Name _____

Lender's Address _____

5. CERTIFICATION
I certify that I have read this application and state that the above information is correct. I agree to comply with all city and county ordinances and state laws relating to building construction, and hereby authorize representatives of this county to enter upon the above-mentioned property for inspection purposes.

_____ _____
Signature of Applicant or Agent Date

SECTION 1 - OWNER/APPLICANT INFORMATION

Park Name_____

Park Address_____

City_____County_____

Zip_____Unincorporated_____Incorporated _____

Park Owner_____

APPLICANT_____

☐CONTRACTOR ☐OWNER ☐Other _____

Address _____

_____Tel. No_____

Architect/Engineer_____Lic. No. _____

Address_____Tel. No. _____

SECTION 2 - DESCRIPTION OF WORK AND VALUATION

_____

_____

_____

_____

_____

_____

_____

_____

Valuation $_____

SECTION 3 – ACCESSORY BUILDINGS or STRUCTURES

☐ NEW ☐ REINSTALL Standard Plan Approval No. _____

☐ Awning ☐ Carport ☐ Porch ☐ Cabana

☐ Other (specify) _____

OWNER_____Tel. No. _____

Address _____

RESIDENT _____Tel. No. _____

Lot No._____

SECTION 4 - MANUFACTURED HOME/MOBILEHOME INSTALLATION

Owner _____ Tel. No. _____

Address _____

Resident _____ Lot No. _____

Serial Number(s) _____

Date of MFG._____ Manufacturer Name/ Model Name _____

Insignia/HUD Label No. _____

SECTION 5 - PARK OWNER, OPERATOR OR MANAGER SIGNATURE
APPROVED:

_____ _____
(Signature Required) Date

DEPARTMENT USE ONLY

ID. No._____
☐ MP ☐ AS ☐ MHI

Closed By _____

Date Closed _____

COLLECTION INFORMATION

Collection # _____

_____

Fee Rec'd _____

_____

Collection Date _____

Assigned To _____

Routed By _____

Upon Department approval to release, and payment of fees, this permit is issued only for items validated below.

PERMIT # _____

MH ACC/S _____

MP _____

BLDG _____

MHI _____

MISC. _____

TECH SER. _____

PLC'K _____

S.M.I. _____

ISSUE _____

TOTAL _____

DIVISION PROCESS RECORD

Application _____

Local Planning _____

Local Fire _____

Local Health _____

Public Works _____

Environmental Impact _____

Negative Declaration _____

School Impact Fees _____

Date _____

Issued By _____

_____

Expires _____

INSTRUCTIONS

ACCESSORY STRUCTURES: Complete Sections 1, 3, 5 and Contractor/Owner Builder Declarations. Submit the completed application and the required fees to the appropriate Area Office listed below.

MANUFACTURED HOME/MOBILEHOME INSTALLATION: Complete Sections 1, 4, 5, and Contractor/Owner Builder Declarations. Submit the completed application and required fees to the appropriate Area Office listed below.

18551 FOUNDATION SYSTEM: Complete Sections 1, 2, 5 and Contractor/Owner Builder Declarations. Submit the completed application and the required fees to the appropriate Area Office listed below.

PARK UTILITIES: Complete Sections 1, 2, 5 and Contractor/Owner Builder Declarations. Submit the completed application and required fees to the appropriate Area Office listed below.

NEW PARKS AND PERMANENT BUILDINGS: Complete Sections 1, 2, 5 and Contractor/Owner Builder Declarations. Submit the completed application and required fees to the appropriate Area Office listed below.

Northern Area Office
9342 Tech Center Drive, Suite 550
Sacramento, CA 95826
(916) 255-2501

Southern Area Office
3737 Main St., Suite 400
Riverside, CA 92501
(951) 782-4420

SECTION 1 - OWNER/APPLICANT INFORMATION: Enter the park name and address. Indicate if the park is located in an unincorporated area or an incorporated area. Enter the park owner's name(s). Enter the applicant's name, address and telephone number (The Department will contact or correspond with the party that is entered as the applicant.) Check the appropriate box to describe the applicant. If the box "Other" is marked, please indicate the relationship to the owner. If the requested services involve an architect or engineer, enter the architect or engineer's name, address, telephone number, and license number.

SECTION 2 - DESCRIPTION OF WORK AND VALUATION: Provide a description of the work to be performed (i.e., installing a manufactured home on a foundation system, etc.) Enter the total cost of the work to be performed (total contract price).

SECTION 3 - ACCESSORY BUILDINGS or STRUCTURES: Check the appropriate box to indicate if the accessory building/structure is a new installation or a reinstallation. A new installation means a new accessory building or structure or an accessory building or structure that has not previously been installed with the unit. A reinstallation means an accessory building or structure that is being reinstalled for the same purpose as the original installation. Enter the Standard Plan Approval Number if this is a new installation. Check the appropriate box to indicate the type of accessory building/structure. If the box "Other" is checked, enter the type of building/structure on the line provided (i.e. storage building, greenhouse, etc.). Enter the name, telephone number and address of the owner. If the occupant of the manufactured home/mobilehome is other than the owner, enter the name of the resident, telephone number and the lot number where the unit is located.

SECTION 4 - MANUFACTURED HOME/MOBILEHOME INSTALLATION: Enter the name, telephone number and address of the owner. If the occupant of the manufactured home/mobilehome is other than the owner, enter the name of the resident and the lot number where the unit is located. Enter the serial number(s) of the manufactured home/mobilehome. The serial number(s) can be located on the Manufacturer's Certificate of Origin, the Certificate of Title, registration documents or on the front cross member of the unit. Enter the year the unit was manufactured. Enter the manufacturer's name and Model name. This information can be obtained from the Manufacturer's Certificate of Origin, the Certificate of Title, registration documents or may be designated on the outside of the unit itself. Enter the California Insignia Number(s) or HUD Label Number(s) issued for this unit, if known.

SECTION 5 - PARK OWNER, OPERATOR OR MANAGER SIGNATURE: The signature of the park owner, operator or manager is required along with the date the form is signed. This signature is an acknowledgment that the park is aware and approves of the services being requested in this application.

CONTRACTOR/OWNER BUILDER DECLARATIONS

Contractor: Contractors proposing construction are required by state law to provide the following information:

Item 1 - Licensed Contractor Declaration: Enter the contractor's license class, license number, date the license expires, the contractor's signature and date.
Item 3 - Workers' Compensation Declaration: Place a check mark next to the declaration regarding the workers' compensation coverage that applies to the contractor. If the second declaration is marked, the contractor must also provide the carrier's name and policy number. This item must be signed by the contractor and dated.
Item 4 - Construction Lending Agency: If there is a construction lending agency for the performance of the work for the service being requested, enter the name and address of the lending agency. If there is no lending agency involved, enter the word "none."
Item 5 - Certification: The certification must be signed and dated by the contractor or agent on behalf of the contractor.

Owner Builder: If the work or activity as described on the application, is being completed by the owner, the owner must complete the following items:

Item 2 - Owner-Builder Declaration: Place a check mark next to the declaration which is applicable. If the third declaration is marked, enter the section number from the Business and Profession Code which provides the exemption and the reason for the exemption. The owner must also sign and date this section.
Item 5 - Certification: The certification must be signed and dated by the owner.

ORIGINAL & 2 COPIES REQUIRED WITH THE PERMIT APPLICATION

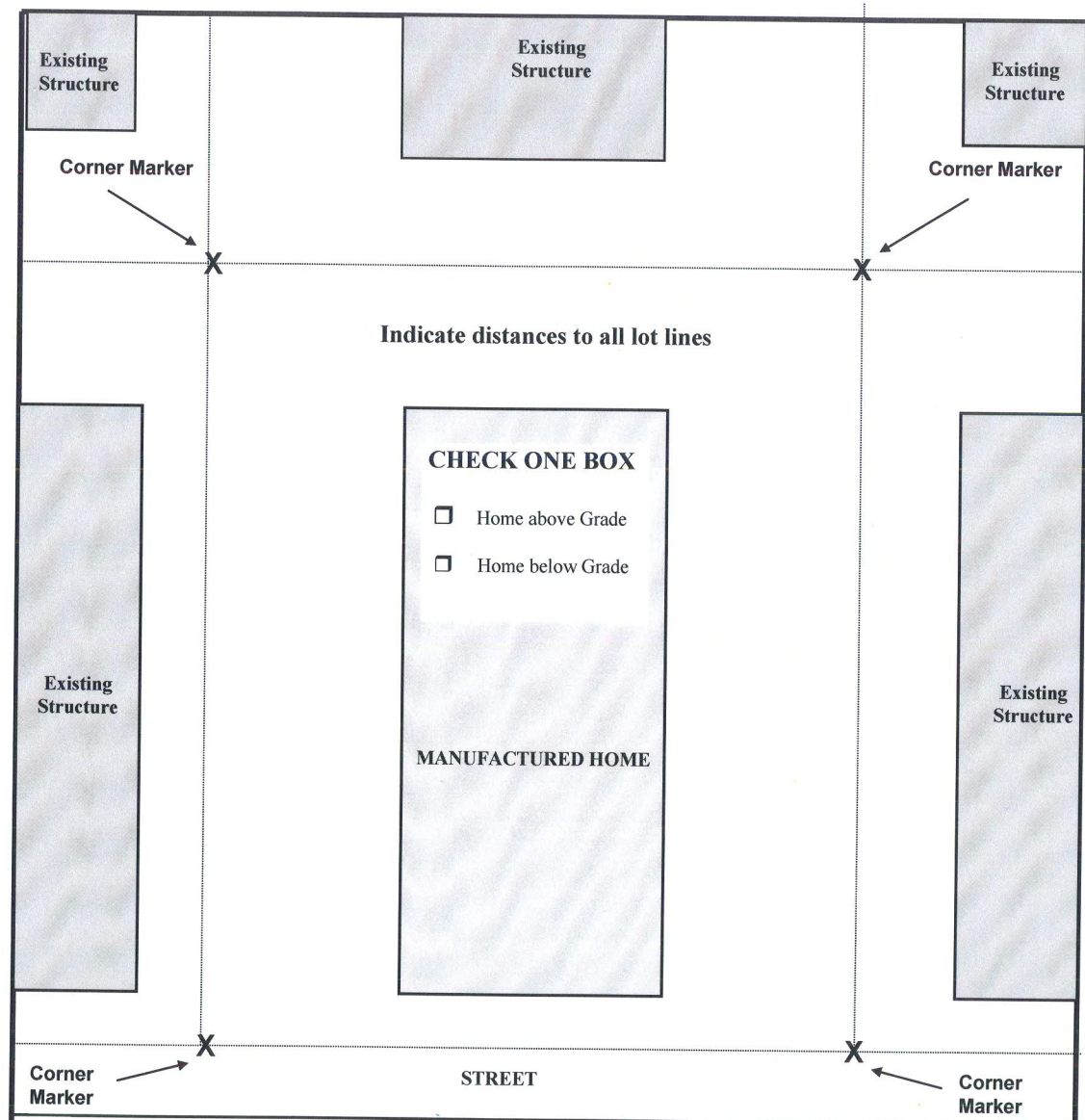

Width and length of lot:_____ x _____ **Width and length of home** _____ x _____

1. Draw any proposed structure(s) and existing structures on the diagram above at the approximate location and identify the type of structures (e.g. deck, awning, etc). Indicate the distance from the lot line to the proposed structure. Also indicate the length and width of the structure.
2. Indicate the exact distances from structures on adjacent lots if located within 10 (ten) feet of your lot line.
3. Enter length & width of the manufactured home (including eaves) and length & width of lot.
4. No vegetation is allowed under the manufactured home or habitable accessory structure. Lot must be properly graded to ensure that water cannot accumulate beneath the manufactured home.

LOT PLOT PLAN AND PARK INFORMATION

A) Park Name _____
Homeowner Name _____
Homeowner Address _____ Sp# _____
City _____ Zip _____

B) Design Information:
Home Amperage: _____ Pedestal Amperage: _____
Home Voltage: _____ Pedestal Voltage: _____
Home Roof Load: _____ PSF
Roof Load for locality: _____ PSF

C) Is the park located in a snow area requiring 30 lb or greater roof loading? ☐ YES ☐ NO

D) The lot line corners at the front and rear are clearly and permanently marked pursuant to Title 25 of the California Code of Regulations, Sections 1104 or 2104 in the following manner:

_____

_____

NOTE: Each lot line corner shall be clearly and permanently marked prior to installation and inspection.

STATEMENT OF RESPONSIBILITY
(ORIGINAL SIGNATURE REQUIRED)

As the park owner or operator, or as his or her authorized representative, I hereby certify that the information provided on this plot plan relative to the location of the manufactured home, all related accessory structure locations and separations and the park and homeowner information is true, accurate and complete. Lot corners have been identified as in item D above.

_____
Signature of Park Owner, Operator, or Manager

State of California
Department of Housing and Community Development
Division of Codes and Standards

Northern Area Office
9342 Tech Center Drive, Suite 550
Sacramento, CA 95826

Southern Area Office
3737 Main St. Ste 400
Riverside, CA 92501

Lot Plot Plan Instructions

DRAINAGE AND GRADING

- **Each mobilehome lot or site shall be graded to insure that water cannot accumulate beneath the unit.**

- **Final grading must be complete prior to final approval.**

IMPORTANT INFORMATION

- Within mobilehome parks constructed on or after 9/15/61, minimum distances from a manufactured home/mobilehome to:
    1. A permanent building shall be 10 (ten) feet, measured from the eaves:
    2. Another manufactured home/mobilehome, installed, including eaves,
        a. Side to side 10 (ten feet)
        b. Side to rear or side to front 8 (eight) feet
        c. Rear to front or rear to rear 6 (six) feet

- Within mobilehome parks constructed prior to 9/15/61, (verification required) a 6 (six) foot separation to any permanent building or another manufactured home/mobilehome is required.

- Manufactured home/mobilehomes or accessory structures shall not be located:
    1. Over underground gas piping, unless the gas piping is installed in gas tight sleeves (open awnings and carports excluded).
    2. Over main sewer line clean outs.
    3. Within 5 (five) feet of a septic tank.
    4. Within 8 (eight) feet of sewage disposal (leach) fields.
    5. Under overhead insulated electrical conductors, unless 8 (eight) feet of clearance is provided.
    6. So as to restrict access to park electrical equipment, indicate clearances.
    7. Over lot gas risers or meters.

- Additionally, accessory structures shall not be located:
    1. As to restrict access or ventilation of the lot gas risers or meters.
    2. So as to block:
        a. Required light or ventilation in the manufactured home/mobilehome.
        b. Required egress windows or exit doors in the manufactured home/mobilehome.
        c. Access to the manufactured home/mobilehome's fixed appliances.

- All combustible construction, including manufactured homes/mobilehomes, eaves, storage cabinets (sheds), awning posts, decks, etc., must be at least 3 (three) feet from the lot lines (except a lot line bordering a roadway). NOTE: Metal storage cabinets (sheds) with no combustible framing (walls/roof) may be placed up to a lot line, provided there is 3 feet clearance from any structure on the adjacent lot.

- The locations of proposed units or accessory buildings or structures in relation to liquefied petroleum gas (LPG) tanks shall be in accordance with Title 25, section 1211 or 2211.

- A Flood Plain Ordinance Compliance Certificate (HCD Form 547) is required for manufactured home installations where the local government agency has adopted a Flood Plain Management Program.

- For manufactured home/mobilehome installation inspections and accessory buildings or structures that enclose an exit, **ALL** exterior doorways shall be provided with a means of egress (stairway, ramp, etc.) complying with the California Building Code at the time of the home installation inspection.

- The total occupied area of a lot may not exceed 75% of the lot area, including but not limited to the unit, awnings, carports, storage cabinets, storage buildings, porches, stairways and ramps. Driveways, walkways, slabs and similar flat work are not subject to this limitation.

- Plot plans and permits are not required for storage cabinets (sheds), provided the total floor area of all storage cabinets on a lot, do not exceed 120 square feet. Storage cabinets exceeding these limits are storage buildings and require a permit and must be constructed as permanent buildings.

- A School Impact Fee Certification (HCD Form 502) may be required for new manufactured home/mobilehome installations on new lots (constructed on or after September 1, 1985).

DEPT. OF HOUSING AND COMMUNITY DEVELOPMENT
FREESTANDING AWNING, CARPORT, DECK, RAMADA OR ENCLOSURE PLANS INSTALLED ON A MOBILEHOME LOT
(HCD PLANS ONLY)

THIS FEE SCHEDULE BECOMES EFFECTIVE FEBRUARY 1, 2009

SQ. FOOTAGE PER STRUCTURE	PERMIT FEE	VALUATION	TOTAL FEES
0 - 54	196.00	45.00	196.00
55 – 82	196.00	54.00	196.00
82 – 108	196.00	63.00	196.00
109 – 135	196.00	72.00	196.00
136 – 162	196.00	81.00	196.00
163 – 190	196.00	90.00	196.00
191 – 217	196.00	99.00	196.00
218 – 244	196.00	108.00	196.00
245 – 271	196.00	117.00	196.00
272 – 298	196.00	126.00	196.00
299 – 325	196.00	135.00	196.00
326 – 352	196.00	144.00	196.00
353 - 379	196.00	153.00	196.00
380 – 406	196.00	162.00	196.00
407 – 433	196.00	171.00	196.00
434 – 460	196.00	180.00	196.00
461 – 488	196.00	189.00	196.00
489 – 515	196.00	198.00	198.00
516 – 542	196.00	207.00	207.00
543 – 569	196.00	216.00	216.00
570 – 596	196.00	225.00	225.00
597– 623	196.00	234.00	234.00
624 – 651	196.00	243.00	243.00

NOTES:

Any deviation from the HCD plans shall be subject to a minimum plan check fee of $203.00 per hour.

Add $7.00 to this fee schedule to alter the park lot electrical service for power to the enclosure. If the MH-Unit is to be altered to gain power, a separate permit (HCD 415) with a $196.00 fee is required.

(Evaluation fees are based on regulatory provisions identified in the California State Building Code)

Revised 1/09

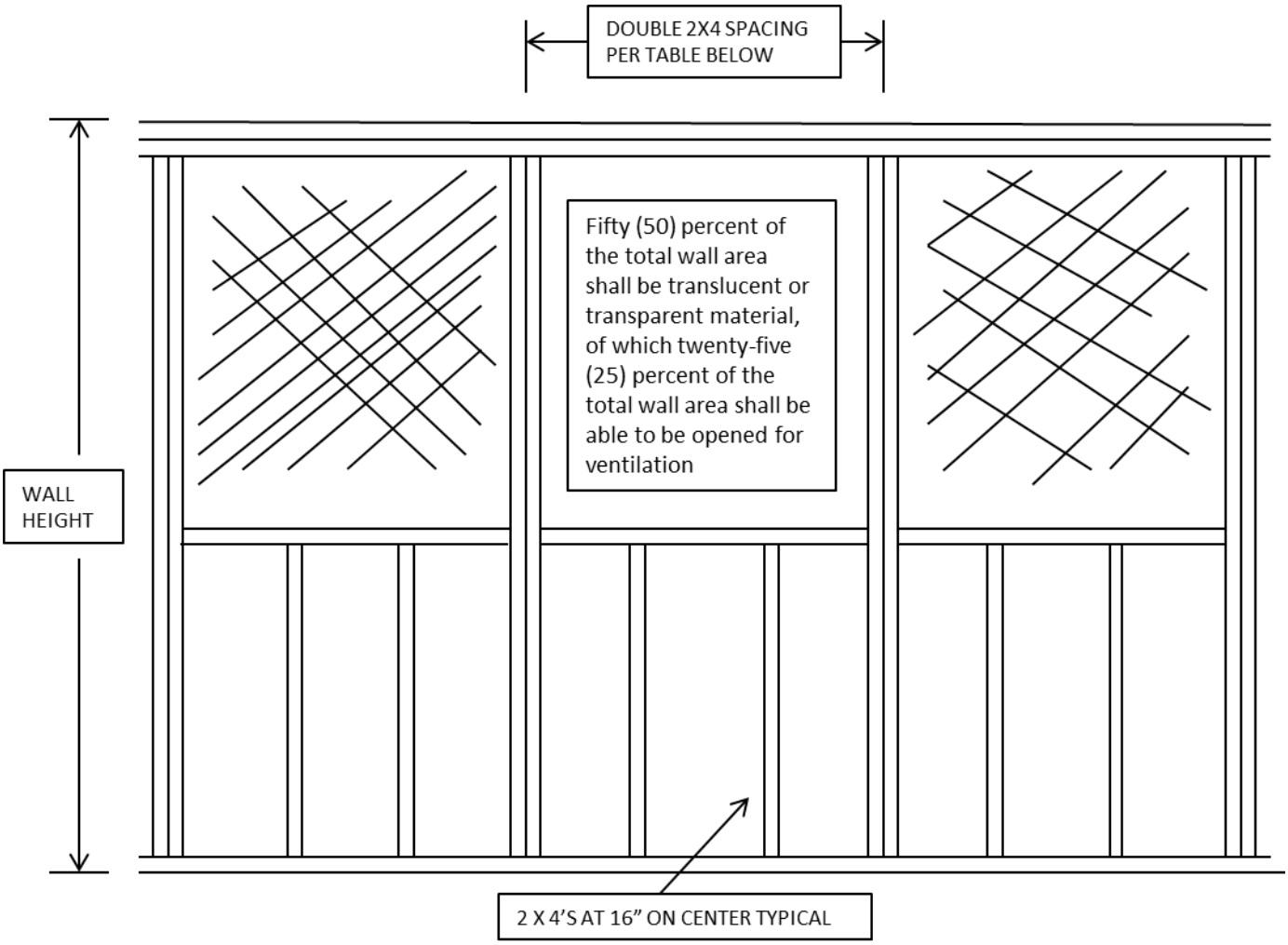

ALL FRAMING MATERIALS TO BE DOUGLAS FIR- GRADE # 2 OR BETTER

WALL HEIGHT	**DOUBLE 2 X 4 SPACING**
9' OR LESS	SPACING AT 68" ON CENTER
10' OR LESS	SPACING AT 48" ON CENTER
11' OR LESS	SPACING AT 36" ON CENTER
12' OR LESS	SPACING AT 28" ON CENTER

WILDFIRE EXPOSURE INFORMATION

If the construction is in a **very high fire hazard severity zone** the exterior wall coverings shall be approved noncombustible or ignition-resistant material per Title 24, Part 2.5, California Residential Code (CRC), Section R327.7. Exterior wall coverings shall extend from the top of the foundation to the bottom of roof sheeting.

All doors and or windows shall comply with CRC Section R 327.8.

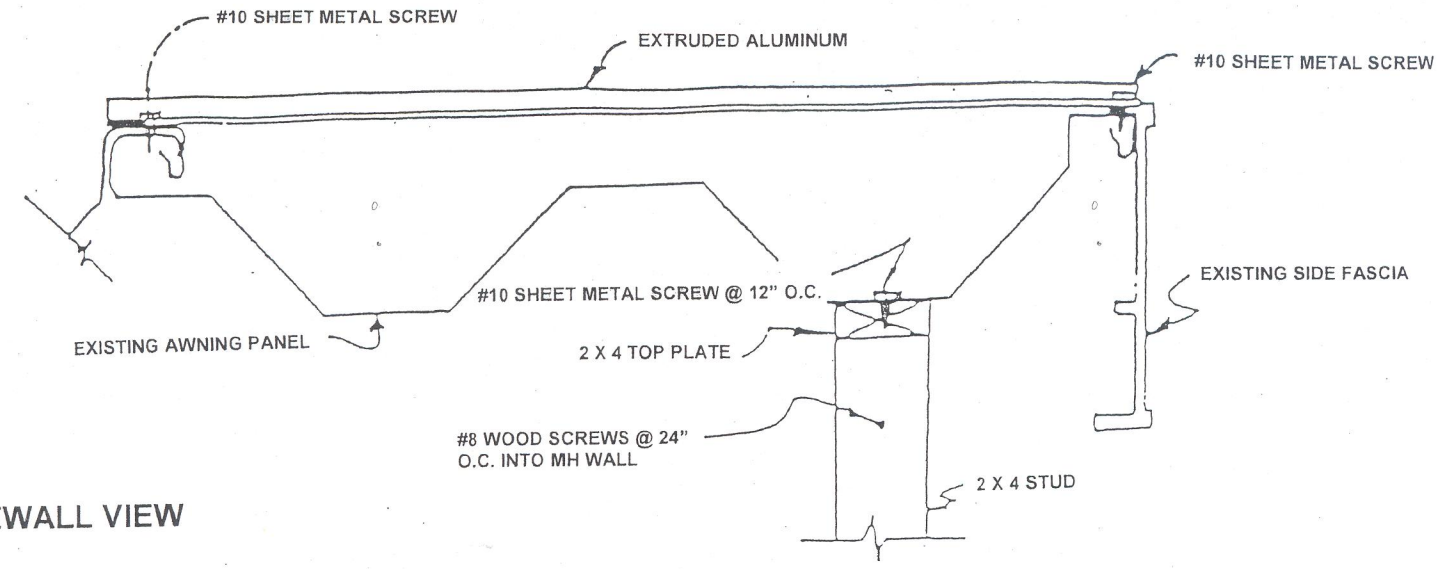

SIDEWALL VIEW

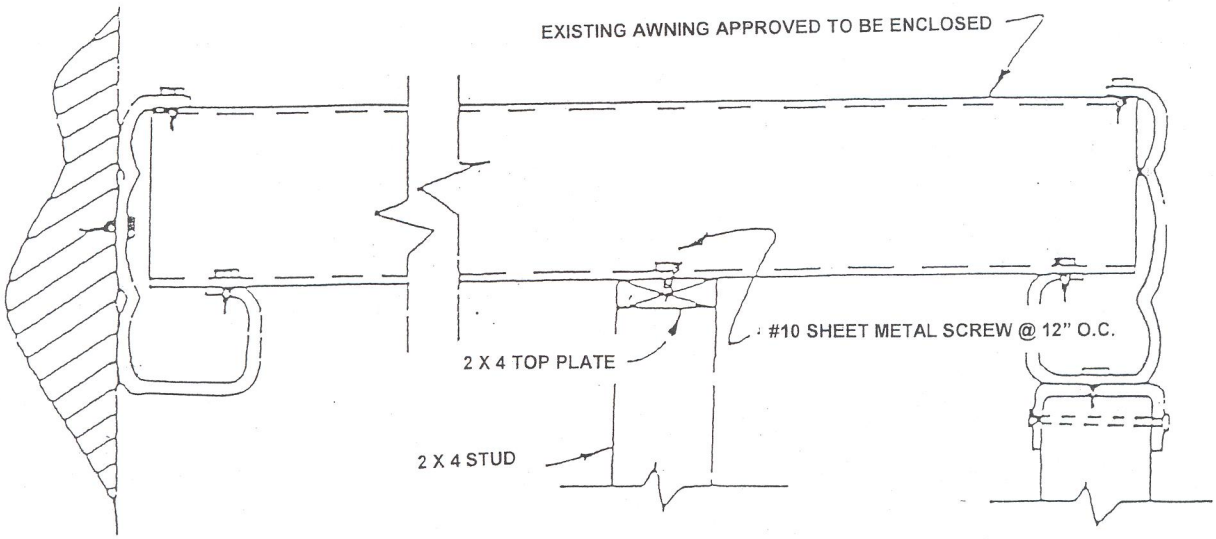

FRONT WALL VIEW

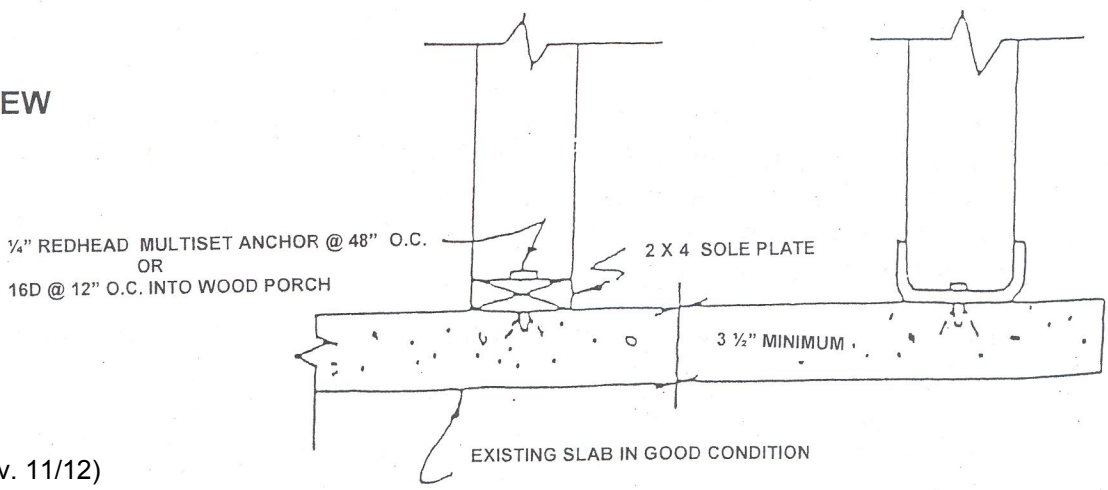

CLASSIFICATION OF FIRE HAZARD SEVERITY ZONE

The following information is used by the **Department of Housing and Community Development** (HCD) to determine the correct materials and construction methods to provide the required Ignition-Resistant Construction in wildfire exposure areas. Applicants should submit the following information with the permit form at the time of application to HCD.

Applicant Name _____

Date _____ Telephone Number _____

Applicant to complete items 1 through 4.

1. Site Location of Home: _____
2. Assessor Parcel Number (if known):_____
3. Mobilehome Park Name (if applicable): _____
4. Park ID #_____

Applicant should obtain the following information from the Local Fire Department:

A. Fire Department or District: _____
B. Contact Person: _____
C. Telephone Number: _____

The home installation or construction described above is or is intended to be located in the fire hazard zone noted below:

Fire Hazard Severity Zone rating for this area is?

___ Very High ___High ___Moderate ___Un-zoned

___ **State Responsibility Area** (SRA) where CalFire does fire suppression.

___ **Local Responsibility Area** (LRA)

___ **Wildland Urban Interface Fire Area** (WUI) Where a Local Jurisdiction has determined by ordinance, an area to be at significant risk for wildfire, they have specified the materials and construction methods for ignition-resistant construction for this property to be as follows:

_____

_____.

___ NA